基本系统委员会

特别届会

2006 年 11 月 9—16 日

韩国首尔

含决议和建议案的最终节略报告

WMO-No. 1017

世界气象组织

天气 • 气候 • 水

本电子文档及其所含内容的版权属 WMO 所有。未经 WMO 书面允许，不得修改、复制、向第三方转发或以电子方式张贴。

© 2007 年，世界气象组织，日内瓦

ISBN 92-63-51017-2

注

本出版物中所用的称号和材料表现方式并不代表世界气象组织秘书处对各国、领土、城市和地区或其当局的法律地位、或对其边界划分的观点立场。

本报告含全会通过的文字，未经正式编辑。

目　录

页次

届会工作总摘要

1.　会议开幕 (CBS-Ext.(06)/文件 2.2; PINK 1 & 2) **1**

2.　会议组织 (CBS-Ext.(06)/文件 2.2; PINK 1 & 2) **2**
2.1　审议证书报告 2
2.2　通过议程 (CBS-Ext.(06)/文件 2; PINK 1 & 2) 2
2.3　建立委员会 2
2.4　其它组织事宜 2

3.　委员会主席的报告 (CBS-Ext.(06)/文件 3(1); PINK 3(1)) **3**

4.　审议执行理事会有关本委员会的决定(CBS-Ext.(06)/文件 4(1); PINK 4(1)) **3**

5.　世界天气监视网的实施和运行状况 (CBS-Ext.(06)/文件 5; APP_WP 5) **4**

6.　世界天气监视网计划、支持功能和公共天气服务，包括开放计划领域组组长的报告 **5**

6.1　综合观测系统（IOS）(CBS-Ext.(06)/文件 6.1(1); (1) ADD. 1; (2); APP_WP 6.1) 5
6.2　信息系统和服务（ISS）(CBS-Ext.(06)/文件 6.2(1); (1) ADD. 1; (2);
(2) ADD. 1; (2) ADD. 2; (2) ADD. 3; B/WP 6.2(3); PINK 6.2(1); (2); APP_WP 6.2(3)) 8
6.3　资料加工和预报系统（DPFS），包括紧急响应活动 (CBS-Ext.(06)/文件 6.3(1); (2); 6 (3); A/WP 6.3(4);
PINK 6.3(1); (2); (3); APP_WP 6.3(4)) 22
6.4　公共天气服务（PWS）(CBS-Ext.(06)/文件 6.4(1); (2); APP_WP 6.4) 31
6.5　业务信息服务（OIS）(CBS-Ext.(06)/文件 6.5; PINK 6.5) 39
6.6　系统支持活动，包括技术合作 (CBS-Ext.(06)/文件 6.6; PINK 6.6) 40

7.　WMO 信息系统，包括 WIS 技术大会的报告 (CBS-Ext.(06)/文件 7(1); (1) ADD. 1; PINK 7(1)) **42**

8.　WMO 空间计划 (CBS-Ext.(06)/文件 8; APP_WP 8) **46**

9.　其它交叉活动 **47**
9.1　地球观测组 (CBS-Ext.(06)/G/WP 9(1); PINK 9.1) 47
9.2　防灾减灾 (CBS-Ext.(06)/文件 9.2; PINK 9.2) 48
9.3　质量管理框架 (CBS-Ext.(06)/文件 9.3; PINK 9.3) 50
9.4　THORPEX (CBS-Ext.(06)/文件 9.4; PINK 9.4) 51
9.5　国际极地年 (CBS-Ext.(06)/文件 9.5; PINK 9.5) 52

10.　有关本委员会的长期计划 (CBS-Ext.(06)/Doc. 10; PINK 10) **53**

页次

11. 未来工作计划 (CBS-Ext.(06)/文件 11; 11(2); 6.1(1), ADD. 1; 6.3(1); WP 11[6.2 & 7]; [6.4]; APP_Doc. 11; APP_WP 11[6.1(1), ADD. 1]; 11[6.2 & 7]; 11[6.4]; 11(2); PINK 11[6.3(1)]..... **53**

12. 审议委员会以往的决议和建议以及执行理事会的有关决议 (CBS-Ext.(06)/APP_文件 12)..... **54**

13. 其他事宜 (CBS-Ext.(06)/PINK 13)..... **54**

14. 第十四次届会的时间和地点 (CBS-Ext.(06)/PINK 14 & 15)..... **54**

15. 会议闭幕 (CBS-Ext.(06)/PINK 14 & 15)..... **54**

届会通过的决议

最终 届会
编号 编号

1 11/1 妇女参加委员会的工作 56

2 12/1 审议基本系统委员会以往的决议和建议 57

届会通过的建议

最终 届会
编号 编号

1 6.1/1 采用世界大地测量系统和全球大地基准面模式作为观测站定位的基准..... 58

2 6.1/2 审议《全球观测系统指南》（WMO No. 488） 59

3 6.2/1 对《全球电信系统手册》（WMO-No.386）第一卷第一和第二部分的修改 59

4 6.2/x1 《电码手册》修正案，第 I.2 卷：
FM XIII GRIB 2、FM XIII BUFR 和 FM XIII CREX 95

5 6.2/x2 《电码手册》修正案，第 I.1 卷 159

6 6.2/x3 《电码手册》修正案，第 I.2 卷，C 部分，二进制码和字母数字码的共同特征..... 170

7 6.3/1 《全球资料加工和预报系统手册》（WMO-No.485）的修订 329

页次

8　6.3/2　长期预报全球制作中心的指定 346

9　12/1　审议执行理事会基于基本系统委员会以往建议的决议或有关世界天气监视网的决议 . 347

附录

I　电码过渡时间表 (总摘要第 6.2.78 段) 348

II　GPC 的其它 LRF 资料和产品 (总摘要第 6.3.33 段) 350

III　建议的 GISC 和 DCPC 指定程序（总摘要第 7.8 段） 351

IV　OPAG 小组和报告员的职责 (总摘要第 11.2 段和 11.5 段) 354

附件　与会人员名单 364

届会工作总摘要

1. 会议开幕 *(议题 1)*

1.1 应韩国政府的邀请，基本系统委员会特别届会（2006）于 2006 年 11 月 9－16 日在首尔召开。此次会议在华克山庄喜来登酒店（Sheraton Grande Walkerhill Hotel）召开，委员会主席 A. I. Gusev 先生于 2006 年 11 月 9 日上午 10 点宣布会议开幕。

1.2 韩国气象厅（KMA）厅长、WMO 韩国常任代表 Man-Ki Lee 先生对全体与会代表表示热烈欢迎，并祝愿他们在首尔这一美丽的城市身心愉快。他对能在首尔召开这样重大的会议表示深深的感激。他提到异常天气状况越来越具有威胁性，现在已经到了世界上所有的气象学家尽力应对这一情况的时候了。他表示相信增强气象科技有助于保障人民的安全和幸福，以及人类活动的所有领域的可持续发展。KMA 积极参与许多发展进程，并愿意在改善气象科技方面分享他们的经验。

1.3 （韩国）副总理兼科技部部长 Woo-Sik Kim 先生致辞欢迎所有与会人员。他也强调严重的灾害所导致的重大伤亡和损失越来越多，并影响到世界很多地方，包括大韩民国。韩国政府意识到气象事业的重要性，并希望从灾后恢复向灾害预防转变。他强调基本系统委员会是 WMO 最重要的技术委员会。Kim 先生提到了地球观测组（GEO）所开展的很有意义的活动，该组从全世界收集关于灾害防御计划的智慧。大韩民国政府本身也参与了很多 GEO 的活动，并设立了韩国 GEO 秘书处。

1.4 WMO 秘书长 M. J. Jarraud 先生代表本组织欢迎与会代表，并对韩国政府承办此次届会及先前的 WMO 信息技术大会表示感谢。他同时感谢韩国气象厅为确保此次届会圆满成功所作的精心安排。

1.5 秘书长总结了使世界天气监测网得以建立的发展过程，卫星和计算机的适时出现使这一发展成为可能。WWW 已经发展为一个综合配套的体系，其存在的基础是 WMO 会员运行的所有设施和这样一种共识，即全球天气系统各部分彼此相互作用，因此没有任何一个国家能够完全自给自足。

1.6 秘书长提出了本次届会的一些重要主题。在其他方面，他提到了几个仍需继续努力的地方：部署一个综合的全球观测系统；应对数据交换需求带来的挑战；互联网及现有设备的使用，这将促进能力建设并支持全球电信系统（GTS）和信息系统在发展中国家的使用。另一个反复提到的问题是保护气象无线电频率的分配。他强调数值天气预报对于传播时效性很强的天气预报和预警来说至关重要。使用集合预报系统（EPS）能够提供额外的能力，但急需指导和培训，方可使预报员把这些产品融入预报过程。他提到旨在支持决策的环境服务和与媒体发展强有力的伙伴关系是公众天气服务计划所应考虑的两个重大事项。

1.7 秘书长忆及，他十分重视 WMO 内部以及与伙伴组织之间的交叉性问题。他提到 WWW 通过提供基本观测网络、通信系统、预报能力和服务提供程序向 WMO 防灾减灾计划提供了支持。他特别回顾了在印度洋海啸之后，WMO 及其伙伴立即采取了行动，把 GTS 作为交换海啸相关信息和预警的一个重要支柱。

1.8 秘书长指出，许多新的业务气象卫星被纳入 WMO 空间计划。对许多应用领域（包括气候监测）而言，全球空间相互定标系统（GSICS）将对改进资料质量具有很高的价值。通过使用负责数据流通的全球综合资料发布服务（IGDDS）将改进数据传输。他忆及 WMO 在全球地球综合观测系统（GEOSS）的发

展中发挥了非常积极的作用，并且 WMO 执行理事会同意，WMO 几个关键系统（如 WIS）成为 GEOSS 的核心部分。他强调这对 CBS 意义重大，因此 CBS 与 GEO 的有效合作是头等重要的事情。

1.9 秘书长在会议结束时强调，CBS 面临的挑战就是确保发展基本系统设施，以便为所有各项计划提供支持，从而 WMO 能够继续为各国的发展计划以及国际战略计划作出贡献。他同时强调有必要与各区域协会紧密合作，并进一步鼓励发展中国家的专家积极参与委员会的工作。

1.10 CBS 主席 A. Gusev 先生欢迎所有与会人员的到来，并提到 NMHS 在现代社会中的作用越来与大，不但要切实保护生命，减少由气象灾害所带来的损失，同时还要制定经济发展和环境保护的战略。因此气象服务的任务也发生变化，与确保水文气象安全之间的关系越来越密切。他强调 CBS 在 WMO 技术委员会的构成中扮演着独特的角色，因为它涉及到为成员国提供必需的数据和产品的基础设施。他以成员国共同拥有的出色的基本系统为荣并愿与大家共享，重申没有一个国家在这方面可以自力更生。CBS 调配的基础设施是全球性的，感谢所有 NMHS 的基础设施，同时这些基础设施对于研究、气候监测和防灾减灾十分重要。他感谢休会期间所有 CBS 专家组和报告员为委员会的工作所做的贡献。他预祝委员会特别届会取得圆满成功，并确信同样会从 TECO-WIS 的成果中获益。

1.11 会议共有 142 名与会代表，其中包括 WMO55 个会员代表以及 7 个国际组织的代表。全体代表名单在该报告附件中给出。

2. 会议组织*（议题 2）*

2.1 审议证书报告*（议题 2.1）*

委员会收到并批准了秘书长代表的报告。

2.2 通过议程*（议题 2.2）*

会议通过了临时议程。会议决定建立特设委员会来审查议题 11。

2.3 建立委员会*（议题 2.3）*

2.3.1 委员会同意采用全会的形式开展工作。全会由委员会主席A. Gusev先生和副主席G.-R. Hoffmann先生主持，A. Gusev先生负责审议议题1、2、4、9.1、10和12-15，G.-R. Hoffmann先生负责审议议题3、9.2-9.5和11。全会A由T. Hart先生（澳大利亚）主持，负责审议议题5、6.1、6.3、6.5和8。全会B由W. Nyakwada先生（肯尼亚）主持，负责审议议题6.2、6.4、6.6和7。

2.3.2 委员会决定建立一个证书委员会，由S. Foreman先生主持，成员还包括S. Barrell女士和G. Fleming先生。建议了一个协调委员会来监督届会的工作。

2.3.3 任命Kwang-Joon Park先生（韩国）为委员会以往建议的报告员（议题12）。

2.4 其他组织事宜*(议题 2.4）*

会议一致通过会议期间的工作时间。向会议告知了文件批准的程序。会议一致认为没有必要准备全会的会议纪要。

3. 委员会主席的报告*(议题3)*

3.1 委员会赞赏地注意到主席 A. Gusev 先生（俄罗斯联邦）的报告，报告提供了 2005 年 2 月以来委员会的活动情况。

3.2 委员会满意地回顾了由160多位专家组成的OPAG专家组和实施协调组在非常短的休会期内完成了大量工作。在此期间召开了 50 多次属于委员会权限的或与 WWW 有关的会议、研讨会和讲习班。有关这些活动和成就的更多详情在工作组组长的报告中提供，并在相关议题下进行了讨论。

3.3 委员会注意到主席在休会期间积极参与了许多对 WMO 具有普遍重要性的活动，代表 CBS 和 WWW 计划出席了许多会议；为各种论坛的讨论提供支持。委员会尤其注意到与 THORPEX、IPY、QMF、NDPM 和 GEO 有关的活动。

3.4 委员会对 CBS 管理组（CBS-MG）第五次会议(2005 年 4 月) 和第六次会议 (2006 年 4 月) 在以下方面所起的重要作用表示赞赏：协调四个 OPAG 的工作；开展必要的调整；以及就有关问题向主席提供咨询，尤其是本委员会参与其他组织机构的工作并代表本委员会参加执行理事会届会。在此，委员会注意到 EC-58 重申 WWW 目前是而且将来也继续是 WMO 的中坚计划，该计划还为交叉性活动做出了积极贡献，委员会同意各项交叉性活动需要为 WWW 结构的加强做出互惠的贡献。EC-58 强调这些活动应当消除不必要的重复，以确保最佳利用现有的资源。委员会还认为对观测系统进行整合的设想将有助于该目标的实现。EC-58 也同意有必要提高 WWW 的知名度，让公众逐步认识到为保障生命财产安全和可持续发展做贡献的这一 WMO 独特计划。它确认 WWW 基本系统可以为 GEOSS 进程提供重要投入，这种协作反过来应有助于 WWW 的进一步发展和加强。EC-58 还强调需要为加强 WWW 的基本组成部分寻求额外的资源，尤其是在发展中国家。

3.5 主席衷心感谢所有参与委员会活动的 CBS 成员的热情合作。他尤其感谢开放计划领域组和专家组的组长及报告员的出色工作。主席还代表 CBS 感谢 WMO 秘书长及秘书处工作人员（尤其是 WWW 司和应用司）的支持与合作。

4. 审议执行理事会有关本委员会的决定*（议题4）*

4.1 对执行理事会第 57 和 58 次届会的讨论结果进行了审议，审议重点是对委员会未来工作会产生影响的那些结论。

4.2 委员会讨论了有关的交叉计划领域，并将讨论结果列入总摘要的相关议题，其中包括 WMO 信息系统（议题 7）、WMO 空间计划（议题 8）、地球观测组（议题 9.1）、防灾减灾（议题 9.2）、质量管理框架（议题 9.3）、THORPEX（议题 9.4）和国际极地年（议题 9.5）。

4.3 委员会注意到 EC-57（第 3.1.1.7 段）提出的关注，即 WMO 第 170 号技术说明“核电厂选址和运行的气象水文问题（1985 年）”作为指导 NMHS 解决与核电厂安全方面的相关问题（包括选址、运行和

应急）的文件可能包含了过时的信息。理事会因而要求秘书长制订一个解决该问题的策略，其中包括寻求与国际原子能机构（IAEA）的合作。委员会同意 CBS 专家应参加这一策略，尤其是有关观测的指南或标准、资料处理和预报方面的活动。委员会注意到，作为 WMO 战略的一部分，俄罗斯联邦可以提供相关专家意见。

5. 世界天气监视网的实施和运行状况*(议题 5)*

5.1 2003 至 2006 年期间，各 MTN 中心收到的 SYNOP 报告大约占要求从 RBSN 台站发出的报告总数的 77%，在此期间上下约有 1%的小波动。在区域 I（2006 年 7 月为 52%）、区域 III（60%）和区域 V（72%）中 SYNOP 报告的来报率仍显不足。会议注意到，会议文件中提交的监测信息很好的总结了观测资料通过 WWW 的来报率，但在考虑具体站点或地区时仍需小心解读。关于监测信息的更多详情可登陆 WMO 的服务器（http://www.wmo.int/web/www/ois/monitor/monitor-home.htm）。

5.2 各 MTN 中心收到 TEMP 报告的比例从 2003 年的 63%上升到 2006 年的 70%。在区域 II 的北部和东部、区域 IV 的北部和区域 V 的部分国家。区域 VI 的 TEMP 报告来报率在近几年有所上升，但该区域的东南部除外。在区域 I 和 III 的很多地区，TEMP 报告的来报率不太令人满意。会议注意到，在某些站点，通常每天进行一次高空观测，当天气情况恶劣时每天进行两次。这在监测过程中没有反映出来。

5.3 在 2005 年 AGM 期间，所需 SYNOP 报告的 76%是在观测时间之后的 1 小时内收到的，还有 2%是在观测时间之后 1-6 小时之间收到的；68%规定的 TEMP 报告是在观测之后的 2 小时内收到的，还有 2%是在观测之后 2-12 小时之间收到的。

5.4 会议注意到某些发展中国家在高空站的运行当中遇到的困难，这主要是由于高成本的设备和耗材。会议强调要协助这些国家购买设备和耗材，包括设备的修复。

5.5 ASECNA 的代表注意到区域 I 中部和西部的国家过去一直在努力维护和发展它们的观测站网；例如，贝宁在 AMMA 项目框架下建立了两个新的高空站。但是，一些国家遇到了困难并需要得到帮助，特别是区域 I 中部的国家。ASECNA 正在与 WMO 合作为这些国家提供帮助。

5.6 在 2003-2006 年期间，各 MTN 中心获得的日均主要天气观测时次 SHIP 报告的数量在 2400 到 3000 之间波动。会议注意到，多年来 SHIP 报告的数量没有明显的增加。应配合 JCOMM 采取行动，以增加海洋站的观测数量，尤其是象阿拉伯海这样的地区。

5.7 在 2003-2006 年期间，TEMP SHIP 报告的数量在 13 到 32 之间波动。2003-2006 年期间，BUOY 报告的数量由 11000 份增加到了 33000 份，该增长主要是由于扩大了飞经每个浮标上空的 ARGOS 多卫星系统的使用范围，从而增加了收集浮标资料的频次。AIREP 报告的数量在 3400 到 5400 份之间波动。2003-2006 年期间 AMDAR 报告的数量从 15000 增长到 42000 份。2004-2006 年间，按 BUFR 格式编码的飞机报告的飞机报数量从 112000 增加到了 152000 份。除了 AIREP 和 BUOY 报告之外，大部分移动站发布的报告发自北半球。

5.8 完善秘书处提供的监测信息报告使得有可能更容易地识别出 WWW 运行中的缺点。会议要求 OPAG-IOS 和 IPAG-ISS 进一步完善 WWW 的监测程序，以便根据 OPAG-IOS 确定的不断变化的观测需求

开展监测；这些程序应该能够区分出观测缺点和通信惯例之间的不同。

6. 世界天气监视网的实施和运行状况*(议题6)*

6.1 综合观测系统 (IOS) *(议题6.1)*

6.1.1 委员会对 OPAG-IOS 主席 James Purdom 先生和他的联合主席 Sue Barrell 女士关于 GOS 地基与空基子系统绩效和进一步发展的内容详实的报告表示赞赏。同时，也赞赏"关于综合观测系统的进展/活动报告"给出的专家组、报告员和协调员对 OPAG OIS 工作所作的贡献，这个文件是作为总摘要中所含的结论和建议的背景材料。 委员会注意到，通过会员协调一致的努力，GOS 继续提供了可持续的观测资料和有关地球及其大气状况的信息，以满足各种用户不断变化的需求。委员会强调，随着卫星资料和服务的不断扩展，尤其是通过 R&D 卫星，在有效获取 GOS 其他组成部分制作的资料方面取得了更多的进步，其中值得注意的有海洋资料和 AMDAR 资料。

6.1.2 委员会满意地注意到，根据仍然有效的各项职责（TOR）和工作计划，OPAG-IOS 的主要活动集中在以下几个方面：GOS 的不断发展、卫星系统事宜的协调与咨询、卫星应用和产品、AWS 资料的要求和表示、OSE 和 OSSE 的科学评价、与 GCOS 的合作、把 AMDAR 纳入到 WWW 业务中、GOS 法规材料的修改和更新。委员会对所有的专家表示感谢，感谢他们为在 OPAG-IOS 中建立的各专家组的有效工作所做出的贡献。

6.1.3 根据在 OPAG-IOS 负责的各领域中所完成的活动和取得的成果，委员会作出如下决定：

GOS 地基和空基子系统的实施与运行

(i) 敦促会员确保 GOS 的可持续运行，鼓励优化观测要素方面的活动，以及研发并部署先进的综合系统。根据 EC-58 的建议，委员会还敦促会员和区域协会遵守《GOS 空间和地基子系统发展实施计划》（WMO/TD-No. 1267）中所载的各项指南和建议。

(ii) 要求 OPAG-IOS 与 CAS 和区域协会合作，为适用的观测计划和系统的研发和实施提供投入，以改进 NMHS 的早期预警能力；

GOS 的发展

(i) 要求 OPAG-IOS 维持和更新 GOS 空间和地基子系统发展实施计划（EGOS-IP），考虑有关 GEOSS 的发展，与区域协会、它们的 WWW 规划和实施工作组，以及相关的技术委员会密切合作，特别应注意发展中国家；

(ii) 要求会员提供联络员，负责报告其所在国家的与 EGOS-IP 有关的进展和计划；

(iii) 要求 OPAG IOS 与 OPAT-ISS 合作，以审议现存的关于 GOS 地基子系统的收集、制作、介绍统计摘要的进展，并对成员提供这种信息的更有效途经的可能性进行检验。

(iv) 鉴于目前及时传递 RBSN 资料，尤其针对 NWP 的业务需要，要求 OPAG IOS 将更多的迫切要传递的目标纳入已有的 GOS 资料的监控中。这种资料包括间隔 30 分钟的地面资料和间隔小于 2 个小时的高空资料。

(v) 要求秘书处从会员那里收集其所在国家中与 EGOS-IP 有关的进展和计划方面的信息，重点关注通过既定机制不能涵盖的活动，如 WMO 空间计划、AMDAR 专家组、JCOMM；

(vi) 要求秘书处就发布会员与 EGOS-IP 有关的进展和计划报告的适当机制，向 OPAG-IOS 提供咨询；

(vii) 要求 OPAG-IOS 对与 EGOS-IP 有关的会员提供的进展和计划信息进行分析，并对进展情况加以概述；

(viii) 要求 ET-EGOS 考虑将长距离地基遥感闪电探测系统作为不断演变的 GOS 经济型组件的可能性。为提高资料稀少地区的覆盖率，这种系统可看作为现有闪电探测系统的补充。

(ix) 要求 CBS 与 CAS、CIMO，以及 WMO 的其他相关委员会和计划合作，考虑制定一项战略，以便当它们各自的试验结束后仍能维持 AMMA、IPY 和 THORPEX 观测网络的关键部分；

卫星系统

(i) 要求 WMO 卫星计划通过 CGMS 和 WMO 卫星事宜高层政策磋商会，以及通过与卫星机构的合作与协调，做到：

(a) 确保LEO和GEO的活动计划更加优化，以满足GOS基准；
(b) 以公开和及时的方式提高资料的可提供性，保证资料的质量在特征和标定方面满足经各方同意的标准，后者可以通过GSICS全球相互标定这一举措加以实现；

(ii) 批准 GCOS 在“GCOS 实施计划的卫星补充篇”中阐述的 9 项交叉性建议；

(iii) 要求 OPAG-IOS 着手更新有效期至 2025 年的空基 GOS 的 GOS 基准，将其作为新的水平，并把范围延伸至 WWW 以外，以使它包括气候监测所需要的更多变量的持续观测结果，以及最终满足 WMO 其他计划的需求。

卫星应用和产品

(i) 要求 OPAG IOS 就附加要素向 CBS 提供咨询，这些要素可能因包括持续的 R&D 活动而影响 2015 至 2025 年期间 GOS 空基部分基准的不断发展。将通过 ET-EGOS、ET-SAT 与 ET-SUP 之间的合作来研究这些因素对 GOS 计划和不断发展的影响；

(ii) 同意在巴西和阿根廷的优秀卫星气象中心建立两个新的教育和培训虚拟实验室；

(iii) 鼓励发展虚拟实验室，以确保 WMO 所有会员，通过 VL 英才中心和中心资助的卫星操作员，接受培训和获取现有资料；

(iv) 鼓励会员（尤其是发展中国家会员）更加积极地参加其 VL 英才中心所提供的培训和宣传计划；

AWS 资料的要求和表示

(i) 审议了关于把 WMO 使用的基准系统作为观测站水平和垂直位置基准的要求，并通过建议 1(CBS-Ext.(06))；

(ii) EC-57 的建议要求技术委员会审查与生成观测资料有关的技术规则，目的是对缺陷、不一致性和误差进行纠正，根据这一建议，要求所有的 CBS OPAG 及其各自的专家组对 BUFR 描述符进行审查，检查它们对《国际气象词汇》（WMO-No. 182）定义的溯源性。有关已发现问题的说明应直接递交给负责资料表示和电码的专家组；

(iii) 要求 OPAG-IOS 与其他相关技术委员会合作，为标准的 AWS 另外制定一组标准和可选变量；要解决 *AWS*（尤其在发展中国家）使用的耐用问题；

(iv) 考虑到 WMO 元数据标准核心规则的最新发展，同意制定几个有关 AWS 的目录，尽量减少实际资料的传输，例如：(a) 测量的变量；(b) 使用的仪器； (c) 使用的资料处理程序；以及 (d) 使用的资料 QC 程序；

(v) 敦促会员遵守 AWS 资料 QC 程序的指南，这个指南现已列入修订后的 GOS (WMO-No.488)规范中。

对观测系统试验（OSE）和观测系统模拟试验（OSSE）的科学评价

(i) 要求 OPAG-IOS 根据规划的 THORPEX、AMMA 和 IPY 的活动，在观测问题上与 CAS 和 EC 南极气象工作组更密切地相互配合；考虑到 GOS 的未来对这些试验和活动遗产的需要，应当与区域协会建立可持续的协调机制；

(ii) 鼓励会员逐步建立其国家和区域的频谱保障机制，以保证它们在微波探测器 GOS 中的核心作用；

(iii) 鼓励 NWP 中心与 THORPEX 和特设组协调，持续促进目标观测战略的研究；

(iv) 要求 OPAG-IOS 和秘书处组织第四次新观测系统对 NWP 的影响研讨会；

AMDAR 事宜

(i) 要求 OPAG-IOS 与秘书处协调，就有关把 AMDAR 专家组纳入 WWW 结构的问题采取进一步措施；

海洋系统

(i) 提请会员参加 JCOMM 船舶观测组（SOT）的 ASAP 专家组，以便提供海洋资料稀少地区的现场探空廓线，作为对 AMDAR 的补充资料；

(iv) 敦促相关会员遵守向 BUFR/CEREX 码过渡的要求；

(v) 建议应把最高优先级给予：

(a) 维持RBSN和RBCN，注意GUAN站是RBSN的一部分；

(b) 在关键地点恢复观测站点；

IOS 对 GEOSS 工作计划的投入

(i) 根据 EC-58 的建议，要求 OPAG-IOS 研究并提供一些建议，内容涉及以更加协调一致的方法努力使 WMO 观测系统成为 WMO 对 GEOSS 全部贡献的一部分；

GOS 的相关法规材料

(i) 审议修订版的《GOS 指南》，并通过建议 2 (CBS-Ext.(06))；根据 EC-58 的决定，要求秘书长在 2007 年完成“指南”的编辑工作并出版该指南；

(ii) 注意到对《GOS 手册》(WMO-No. 544) 中与第一、二、三和四区域协会有关的文本的修订尚待进行，提请相关的区域协会保证对“手册”的相应部分进行更新。

6.2 信息系统和服务（ISS）*（议题 6.2）*

6.2.1 委员会对 OPAG 组长施培量先生的报告表示感谢。委员会满意地注意到在众多任务上所取得的进展和成就。委员会注意到各专家组提出的各项建议案得到了 ISS 实施协调组的审议和提炼。委员会对参与各个专家组和实施协调组工作的众多专家表示感谢。

GTS 的实施和运行现状

6.2.2 所有 25 条 MTN 电路均处于业务运行状态。17 条 MTN 电路是通过数据通信网络服务在改进的 MTN 框架内实施的，5 条电路的运行速率为 64 kbit/s，1 条电路的速率为 28.8 kbit/s，1 条电路的速率为 9.6 kbit/s。所有 MTN 电路（一条除外）的运行协议均为 TCP/IP 或已制订了向 TCP/IP 过渡的周密计划。尽管如此，委员会关切地注意到有一条电路（新德里—开罗）仍采用非常低的速度，无法满足 MTN 的需求。委员会注意到在 WWW 中心对 GTS 实施基于计算机系统的工作正取得进展，特别是通过在几个发展中国家引入成本效益高的 PC 系统。委员会对在实施 RMTN 方面所取得的显著进展感到高兴，但是也注意到在有些地区在区域级和国家级上仍存在着严重的不足。在此方面，委员会注意到各个 NMHS 在区域内通过举办研讨会、培训活动和试点项目的方式开展的合作可以此克服这些不足之处。

6.2.3 在一区域，尽管经济上面临严重困难，经过不断努力，通过租赁线路、卫星通信或公共数据网络（包括因特网）等手段，已对 GTS 电路作了一些改进。卫星资料分发系统（EUMETCast、RETIM-非洲和 SADIS，这些是 ICAO 航空固定服务（AFS）的组成部分）和资料收集系统（METEOSAT/DCS）会继续发

挥重要作用。仍存在着严重缺陷，尤其是在国家层面上，然而已制订了加强 WWW 基本系统的战略，以促进可持续发展，特别是在气象资料通信方面。

(ii) 提请会员继续努力，以同 JCOMM 观测计划领域（OPA）战略工作计划相一致的方式，为漂移浮标增加压力传感器（目标为 1250 台气压表）；

(iii) 强调唯一的船舶标识对于实时和延迟方式的质量监控活动是非常重要的，因此，由会员国根据决议 7 (EC-58) 提出的船舶呼号掩蔽方案应提供唯一的船舶标识；

GCOS 事宜

(i) 鼓励相关会员把来自其 GCOS 网络台站的历史资料和元数据传送到新建立的 CBS GCOS 牵头中心；

(ii) 要求 OPAG-IOS 与 CIMO 协调，继续开展活动，以保证所有适合的观测系统间的互用性，这样，来自任何观测系统的观测资料都可以为所有的 WMO 计划做出贡献；

GOS 的区域方面

(i) 提请 GOS 区域方面的区域报告员/协调员根据为一区协准备的文件，在 2007 年 3 月以前制定出其所在区协的 GOS 不断发展实施计划。这一文件将通过 PIW WG 转呈给每个区域协会的主席，供该区协的会员审议和同意；

新仪器对 GOS 的影响

(i) 注意到在对某些无线电探空仪系统，特别是发展中国家的系统进行升级和更换方面取得的进展，以及新技术的引进，要求秘书处继续对这种情况进行监察，并视需要采取必要的行动。重新分发有关“***新仪器对 GOS 的影响***”的问卷调查，使各会员及时了解有关获取和分发问卷调查的结果；

(ii) 提请会员对有关新仪器影响的调查问卷提供它们的答复（包括那些已作出答复的会员，它们应确认自己的信息/补充任何遗漏的细节），目的是为编写拟交付 CBS-14 的综合报告提供帮助；

(iii) 提请 GOS 区域方面的报告员/协调员以及优秀卫星气象卫星中心的教育和培训虚拟实验室（通过虚拟实验室管理组）积极主动地参与组织新仪器对 GOS 影响的调查；

未来综合 GOS 及其对发展中国家的影响

(i) 建议 GOS 的不断发展应当考虑到升级、恢复、更换和能力建设（尤其是在新技术的应用方面），对资料的应用和资料的制作这两个方面都应加以考虑；

(ii) 为了帮助各国制作用于国际交换的资料，建议应当对公共基础设施、专业技术和资金问题给予应有的考虑；

(iii) 同意按照 GOS 空间和地基子系统不断发展实施计划（IP-EGOS）中提出的指导意见，建议发展中国家更广泛地使用那些较少依赖公共基础设施、专业技术和资金的观测系统（卫星、AMDAR，以及 AWS）。还建议至少必须拥有一组可靠的 RAOB，它将作为高空网的骨干，并对具有足够高度和准确度的卫星观测资料进行验证；

6.2.4 二区域多数 GTS 电路的运行速度为中速或高速，但仍然有一些低速线路。在二区域，通过继续改进资料通信服务（包括帧中继服务），并补充以卫星分发系统（中国运行的 PCVSAT；俄罗斯联邦运行的 MeteoInform）和作为 ICAO AFS 组成部分的 EUMETCast 和 SADIS 以及因特网的使用，RMTN 特别是位于东部和南部地区的 RMTN 正得到改善。目前的 GTS 电路中约有 60%已过渡到 TCP/IP 协议。改进 RMTN 的计划已接近实现。

6.2.5 在南美，2006 年启动了一项周密的计划，在 WMO 签署的供应商的新 RMDCN 框架合同基础上，正式实施三区协区域气象资料通信网（RMDCN）。这些升级工作将使 NMHS 大大加强其接收和使用高价值的资料和产品。所有 13 家 NMC 也都已装备了美国运营的国际卫星通信系统（ISCS）的接收系统。

6.2.6 在四区域，美国运营的国际卫星通信系统（ISCS）为 RMTN 提供服务，同时也为三区域和五区域提供资料分发，该系统已升级为 TCP/IP 协议，其能力也得到提高；ISCS 的升级也导致更换所有 NMC 的工作站。

6.2.7 由于实施了帧中继服务并扩大和升级了国际卫星通信系统（ISCS），五区域的 RMTN 取得了显著进展。依赖 GOES-East, GOES-West 和 PeaceSAT 卫星的应急管理员天气信息网络（EMWIN）是太平洋地区关键的资料、警报和预报来源，尤其是对小岛国而言。因特网的使用也越来越多，尤其是在收集观测报告和联系太平洋小国方面。目前主要由澳大利亚和新西兰负责拓展 RANET 项目和太平洋高频数字化电子邮件网络。

6.2.8 六区域 RMDCN 是由 ECMWF 负责协调的基于共享管理的网络服务，该网络与 36 个 RTH 和 NMC 以及 ECMWF 和 EUMETSAT 进行了互联。这些资料通信网络服务一直用作一种出色的、成本效益高的 GTS 实施手段，可靠性十分高，安全性很充分，服务质量有保障，并且容量易于扩充。对 RMDCN 服务进行了扩展，使之涵盖跨区域和 MTN GTS 电路。计划在 2007 年初将主要的 RMDCN 网络结构从帧中继过渡到多协议标签转换（MPLS）。六区协的其他会员运行着租赁的点对点 GTS 电路和因特网连接，预计将在成本效益可行的时候与 RMDCN 实现连接。基于 DVB-S 的卫星分发系统（DWDSAT、RETIM、MeteoInform 和 EUMETCast/MDD）也发挥着重要的作用。

6.2.9 委员会对卫星多点通信系统的广泛实施和全面技术升级表示赞赏，这些系统是 GTS 分发大量信息的不可分割的组成部分，是对专用线路的补充。每个 WMO 区域都至少被一个卫星资料分发系统完全覆盖，在国家或次区域层面上还实施着若干系统。在一些区域已实施了利用数字化视频广播（DVB）技术的卫星系统或有了周密的计划。利用数字化音频广播（DAB）技术进行“数据播放”的卫星系统还被用于在非洲和太平洋部分地区开展的“世界空间无线电和因特网”（RANET）试验，并被印度气象局（IMD）用于对 RTH 新德里的无线电广播进行更换和升级（参见第 6.2.13－ 6.2.15 段和关于 IGDDS 的议题 8）。

GTS-WIS 通信结构

6.2.10 委员会同意 WIS 应当提供各种类型的服务，以满足不同的需求；应当明确以下几种重要类型的服务：

(1) 为时间要求严格、业务上重要的资料和产品提供日常收集和分发服务：

这种服务基于实时“推”机制，包括多点播放和广播；它将主要通过专用通信途径实施，以提供有质量保证的服务，如租赁电路、专用资料通信网服务和卫星数据分发服务；

(2) 数据恢复、访问和检索服务：

这种服务基于有相关资料管理功能的要求/应答“推”机制；它将主要通过因特网（HTTP，FTP……）实施；

(3) 及时分发资料和产品的服务：

这种服务基于滞后模式的“推”机制；它将通过把专用通信途径（在（1）中使用）和公共数据通信网尤其是因特网相结合的方式来实施。

预计通过灵活的用户界面可以提供对服务类型（1）和（3）的动态调整和管理。

6.2.11 EC-58“强调由于受益于信息通信技术（ICT）在 GTS 实施、运行和更新方面取得了持续进步，GTS（包括基于卫星的资料分发系统和改进后的 MTN）作为交换和传送时间要求严格、业务上重要的资料的核心通信部分，将为 WIS 的实施做出有效的贡献”。对此，委员会强调 WIS 实施的第一阶段是针对时间要求严格、业务上重要的资料的 GTS；GTS 目前正在进行持续升级和改进。GTS 提供的业务资料交换服务目前主要侧重于 WWW 的需求，将会对其拓展以满足作为 WIS 一部分的其他计划的业务需求。

6.2.12 委员会强调 WIS 的第二个实施阶段将通过向所有获得授权的用户提供更加灵活的资料恢复、获取和检索服务（类型（2））以及更加灵活的及时分发服务（类型（3））来拓展信息服务。

6.2.13 委员会注意到作为 WIS 一部分的 WMO 综合全球资料分发服务（IGDSS）系统是 WMO 空间计划空间观测资料和产品的交换机制。IGDSS 项目为面向 IGDSS 系统的定义和业务运行的活动做了准备。

6.2.14 IGDSS 具有以下多种不同功能：

(a) 资料获取（来自卫星的原始资料、高空资料、跨区域的资料交换）；

(b) 资料分发（通过卫星通信广播、直接广播或点对点网络）；

(c) 资料按需索取，允许资料搜寻和向经授权的用户交付资料；

(d) 资料和用户管理，包括对用户需求的评审，可共同使用的目录，以确保服务质量和对用户的支持。

6.2.15 IGDSS 的基本原理是汇集与全球跨区域资料交换网有连接的区域部分。根据 WIS 的定义，每个区域部分将包括一个资料收集或产品中心（DCPC），它将保证各个途径的日常分发，包括覆盖该区域的卫星资料分发系统（高级分发方法，ADM）。IGDSS 项目下的活动包括：将滚动需求评审过程拓展到表达区域资料需求，将 RARS 的概念扩大至全球范围，实施全球 ADM 覆盖及在 CGMS 卫星运营方和 WMO 中间进行适当的全球协调以确保具有 WIS 规定标准的相互可用性。委员会注意到 IGDSS 作为 WIS 一部分将主要提供上述类型（1）和（2）的服务。预计在 IGDSS 框架内实施的卫星资料分发系统将继续支持空间观测资料和产品以外的其他资料的分发。

6.2.16 委员会要求 OPAG-ISS，尤其是 ET-CTS 进一步改进 WIS-GTS 资料-通信结构，并考虑如何改进高优先级资料和产品的全球交换，以支持 WIS-GTS 框架内虚拟的全灾害网络。

资料通信系统和技术

关于 GTS 的 TCP/IP 及相关通信协议

6.2.17 委员会批准了修订后的前言、引言和附件 II-15 的第 1 和 2 章（在 GTS 上使用 TCP/IP），并要求 ET-DCS 继续修改和更新作为实施和应用 TCP/IP 套件的整个附件。委员会回顾了最初分配给 GTS 连接的 IP 地址组已不再正式使用，这是因为因特网服务提供商要求严格遵守因特网标准（RFC）。委员会注意到 ET-DCS 已制订了 IP 地址安排建议，其中包括一份简短指南，以帮助有此意愿的 NMHS 能以最小的 IP 地址组建立 TCP 架构。

6.2.18 关于 IPv6 的发展情况，委员会注意到 IPv6 在全球的采用要慢于预期，甚至在亚洲也如此。委员会认为在 IPv6 的测试方面现在花大力气尚不成熟，但委员会要求 OPAG-ISS 跟踪形势发展，以便采取相应行动，并尽早调研为 WMO 注册 IPv6 地址的可能性和好处。

6.2.19 委员会回顾了已批准的一般文件命名规则。新报类的文件命名应遵循下列格式：

pflag_productidentifier_oflag_originator_yyyyMMddhhmmss[_freeformat].type[.compression]

委员会满意地注意到 OPAG-ISS 制定的新的相应强制性字段“产品识别符”的分配程序，其基础建立在一个按可识别的“授权”字符串的会话层结构上，以便确保其唯一性并方便管理，同时批准将此程序纳入《GTS 手册》的附件 II-15。委员会注意到在<地名标识>中的国家代码应符合 ISO 3166-1（α 2 代码要素）；它还要求 OPAG-ISS 进一步巩固和维护<数据标识符>列表，内容应与《电码手册》通用表 C-13 中规定的数据分类和次分类一致。委员会敦促所有中心应在 2008 年前实施这一程序并完成过渡工作。

资料调用程序

6.2.20 委员会注意到 netCDF、HDF5 和 OpenDAP 是在大的环境科学领域广为接受的资料调用程序。NetCDF（网络通用资料格式）是一种以阵列为导向的资料调用界面，它提供了一种不受机器限制的格式，这种格式支持创建、调用和共享科学资料；HDF5 是 netCDF 使用的存储层，而 OpenDAP（针对网络数据调用协议的开放源项目）能让远程地点访问本地的数据而不用顾及本地的存储格式。委员会注意到已为资

料加工目的对这些数据格式和调用程序进行了优化，但是鉴于在这些格式中所嵌入的自我证明的资料（元数据）数据量很大，因此没有为大范围的资料交换或存档进行优化。然而委员会也同意为了满足科学界的需求 WIS 应当支持这些格式，至少是在相关的 DCPC 中心。

在 GTS 中心之间使用因特网的指南

6.2.21 EC-58 注意到因特网作为 GTS 的补充在交换、调用和传递大量资料和产品中发挥着越来越大的作用。它还强调了因特网对规模较小的 NMHS 尤其是发展中国家和 LDC 的重要性，因为这是唯一经济上可承受的通信手段，包括将资料发送到 GTS。为补充资料收集，理事会敦促更多管理 RTH 的会员依据 CBS 指定的推荐规范开展基于因特网的服务。它还重申了 CBS 继续开发/更新关于以最小的业务和安全风险使用因特网的指南材料以及关于发展中国家的 NMHS 使用足够的 ICT 指南材料的重要性。

6.2.22 委员会回顾了关于在 RTH 和 NMC 之间建立成本效益高且安全的因特网连接指南，包括当前的《GTS 中心之间因特网虚拟专用网（VPN）指南》和技术说明《IPSec 可行性研究 –因特网上基于 IPSec 的 VPN 指南》。委员会还赞赏地注意到二区域和五区域的 WIS VPN 试点项目，主要是涉及 WIS NC 与其 GISC 的连接性问题。委员会要求 OPAG-ISS 继续跟踪 VPN 的发展动向，对指导文件作相应的更新和改进。

6.2.23 委员会满意地注意到《因特网规范指南》已得到更新，以跟上技术发展。

WWW 中心信息技术设施指南

6.2.24 委员会赞赏地注意到 ET-CTS 完成了《WWW 中心 FTP 和 FTP 服务器使用指南》，这份文件是以 JMA 编写的文件为基础。指南分享了有用的经验，并为运行高效的 FTP 服务器和避免出现重大困难提供了重要指导。

6.2.25 委员会强调了 NMHS 不得不面临的越来越多的网络系统安全威胁，对专门网站以及其他互联网站的潜在影响，特别是针对 WWW 各系统。委员会满意地注意到 ET-CTS 已完成了《WWW 中心信息技术安全（ITS）指南》。该文件包括目的、行业批准的安全流程、安全程序和最佳规范。该指南对管理人员具有可读性，是技术人员的准确信息来源。

6.2.26 委员会注意到上述指南已公布在 WMO 万维网服务器上，以方便所有的 NMHS 人员获取并对其更新。鉴于该指南对规模较小的 NMHS 尤其是发展中国家 NMHS 的重要性，委员会提请秘书长考虑安排资源把这本指南翻译成其他工作语言的可能性。委员会还强调了有关信息和通信技术的教育培训工作的重要性，以及实验平台在检验相关技术在业务应用中的价值。

GTS 的运行和信息交换

气象公报的格式

6.2.27 委员会批准了对《GTS 手册》的如下修改要求：

(a) 在 2007 年 11 月 7 日后将所有提及各字段和 BBB 指示符 Pxx 的出处从《GTS 手册》中清除；

(b) 要反映出 RRx 是用带有包含 YYGGgg 在内的相同简式报头行补发或随后发送报文，无论这些报告是准点、晚点或延迟发送；

(c) 说明对包含“其他资料”的 BUFR 和 CREX 公报进行定义的程序；

(d) 反映 BUFR 格式的空白公报和报告；

(e) 要满足航空气象的需求，尤其是为 GAMET 公报和火山灰特别航空报专门分配独占性的 WMO 标题识别符；

(f) 为 BUFR/CREX 公报分配简式报头。

GTS 收集和分发洋面资料和深海海啸探测资料、地震资料以及分发海啸预警和相关信息的程序

6.2.28 海啸预警系统需要洋面和深海的海啸探测资料，以便探测和测量海啸波，从而及时发布警报和相关信息。尤其是在太平洋和印度洋上，有一些用于海啸预警系统的海洋高度计。委员会同意，GTS 应当为收集和分发这些资料提供支持。对此，委员会就分配专用简式报头 T1T2A1A2ii 并纳入《GTS 手册》达成一致意见。注意到在报告与洋面高度报告有关的海洋和气象要素方面目前已有 CREX 码格式的规定，委员会建议使用表驱码格式来描述这些资料。

6.2.29 海啸预警系统还需要地震资料，以便提前探测可能的海啸。GTS 包括了以参数格式交换地震资料的程序，一些国家目前正在使用这些程序。鉴于地震参数资料的量有限，GTS 能够根据有关国家规定的要求进行地震参数资料的国际交换。与此相反，地震波形资料（即来自地震传感器的资料）表现为各个国家从实地采集的大量资料，尤其是靠地震源很近对本地构成威胁的国家。目前的 GTS 实施情况总体上讲不能按照时间要求处理这种容量的传输。可以在多边的基础上就 GTS-WIS 的升级达成一致并进行实施，以满足这种增加的传输量。应开展这项工作，从而为多灾害方法提供支持，同时这项工作需要与 GTS-WIS 区域规划进行协调。

6.2.30 委员会同意将 T_1T_2 分配用来交换地震资料，以推动在多边基础上实施 GTS 支持。委员会还同意第二优先应是在 GTS 上交换地震参数资料，第三优先是地震波形资料，注意到可以在多边的基础上实施更高的优先级别来满足具体的需求。

6.2.31 WMO 与 UN/ISDR、UNESCO/IOC 和 NMHS 协调，积极推动并采取了行动，以确保最有效地将 GTS 用于快速支持临时海啸咨询信息服务以及更长期地支持印度洋海啸预警系统。应当在多灾害早期预警途径范围内把向太平洋地区提供的支持拓展到其他相关区域，包括加勒比地区、地中海地区和北大西洋。委员会强调需要给有关的 NMS 人员提供适当的培训，以确保 GTS-WIS 和更广泛的 WWW 组件向多灾预警提供有效的业务支持。

6.2.32 “海啸监测信息”（TWI）公报主要针对印度洋周边的国家，该公报根据太平洋海啸预警中心（PTWC, NOAA/NWS，美国夏威夷）和日本气象厅（JMA，日本东京）的要求分别通过华盛顿 WMC/RTH 和东京 RTH 发布。区域通信枢纽（RTH）尤其是 MTN 上的 RTH 已经更新了它们的路由目录，以确保高效地发送和分发这些 TWI 报，特别是发给印度洋地区为相关 NMC 提供服务的 RTH 和管理着覆盖印度洋所有部分

的卫星资料分发系统的 RTH。在卫星资料分发系统的一些传输计划也插入了 TWI 公报，其中包括 RETIM-Africa、EUMETCast (West IO)、CMA PCVSAT (N-E IO)、ISCS 和 EMWIN (East IO)。

6.2.33 委员会注意到海啸监测和警报公报在 GTS 上是以最高优先级（优先级 1）进行交换。委员会认识到在 2 分钟内完成端-对-端传输的要求是可以实现的，并建议在 GTS 上使用。在 MTN 和一些其他 GTS 线路上已证明是成熟的。有关的 NMS，如印度洋相关国家的 NMC，应当采取必要行动，根据本国所要求的目的尽快接收和处理/转发海啸监测或警报公报。

6.2.34 ET-OI 开发并测试了确认通过 GTS 收到报文的程序，委员会对此程序达成一致意见。委员会注意到在 IO-TWS 开发框架内的迫切要求。尽管最初提出这些程序要求的目的是支持海啸监测信息（TWI）的有效交换，委员会同意这些程序应当与需要确认的所有公报相同，因此将其纳入《GTS 手册》。

对《GTS 手册》第一卷全球方面的修改

6.2.35 在达成上述所反映的结论后，委员会通过了关于修改《GTS 手册》第一卷全球方面第一、二部分的建议 3（CBS-Ext.(06)）。

6.2.36 委员会强调要深入、全面地修改和重组《GTS 手册》，以更好地适应目前的技术和规范，并在会员设计和实施相关信息系统中向会员提供帮助。修订内容还应与 WIS 相关规章文件（如《WIS 手册》的制订工作进行充分协调。委员会要求 OPAG-ISS 在秘书处的协助下研究开展这项任务的最有效机制，同时也注意到这需要大量的人力资源和足够的技术。

WWW 的运行情况的量化监测

6.2.37 基于 PC 的通用监测应用软件的使用极大方便了对 WWW 中心的 WWW 综合监测（IWM）进行持续和有效的实施，特别是开展业务测试。委员会高兴地注意到德国（DWD）在个人计算机上开发了一套监测应用软件（METDATA 监控器）。德国愿意把 METDATA 监控器软件提供给所有 WMO 会员，有 58 个国家提出了要求并下载了该软件。由于 DWD 对 WWW 监测活动的这一重要贡献，委员会向其表示衷心感谢。

6.2.38 利用 METDATA 监控器软件在 RTH 达喀尔开展了 IWM 业务试验。取得的结果非常积极。RTH 达喀尔建议将 METDATA 监控器软件应用于所有的 RTH 和 NMC，以此方式大力推动对 WWW 中心 WWW 综合监测的持续和有效实施。委员会感谢 RTH 达喀尔为 IWM 试验所做的贡献。委员会注意到德黑兰 RTH 也正在计划参加 IWM 业务试验。

6.2.39 委员会同意从 2007 年 10 月起将测试阶段转为 IWM 准业务阶段。委员会强调了 RTH 在 IWM 中的关键作用，因为它们负责从其关联的 RTH 收集监测报告并将汇总的 IWM 监测报告发给其关联的 MTN 中心和秘书处。委员会同意应当邀请负责 RTH 的 WMO 会员从 2007 年 10 月起参加 IWM 的准业务阶段。委员会要求 OPAG-ISS 编写可在准业务阶段使用的 IWM 实施指南；评估在准业务阶段所获得的经验和成果，并对该指南进行相应的修订。

6.2.40 考虑到向 TDCF 的过渡，委员会强调了监测 BUFR 码格式资料的重要性。它赞赏地注意到为扩大 MTN 特别监测（SMM）而做出的下列贡献：

(a) 奥芬巴赫和东京正在分别制作飞机 BUFR 资料(T1T2A1= IUA)和风廓线仪 BUFR 资料($T_1T_2A_1$= IUP)的预分析文件；

(b) 墨尔本同意为地面($T_1T_2A_1$= ISM, ISI, ISN)和高空观测($T_1T_2A_1$= IUK, IUS, IUW, IUJ)制作预分析文件；

委员会提请 RTH 为监测 BUFR 码格式的其它类型的资料做出进一步的贡献。

6.2.41 委员会要求 OPAG-ISS 修订 WWW 综合监测程序，以便在 IWM 准业务阶段开始监测各个 WWW 中心 BUFR/CREX 报告的可提供性。委员会注意到 METDATA 监测软件可以用来监测 BUFR 报告，计划将其拓展到监测 CREX 报告。

改进的 MTN 项目（IMTN）

6.2.42 委员会非常满意地注意到改进的 MTN 项目（IMTN）的实施工作已接近完成，这有助于稳步、迅速地实施高效、可靠的资料传输网络服务，以开展 GTS 核心服务。

6.2.43 IMTN 的实施计划包括：

(a) 实施“云 I”，向 RTH/WMC 华盛顿和墨尔本之间及 RTH 东京、埃克塞特、巴西利亚和布宜诺斯艾利斯之间提供互联性，下一步包括 RTH/WMC 莫斯科；

(b) 实施“云 II”，作为六区域 RMDCN 的延伸，向 RTH 埃克塞特、图卢兹、奥芬巴赫，RTH/WMC 莫斯科和其他临近的 RTH，即 RTH 内罗毕、达喀尔、阿尔及尔、开罗、吉达、新德里和北京提供互联性。将东京—北京和东京—新德里电路纳入进来也为两“云”之间提供了有效的互联性。

6.2.44 关于“云 I”，华盛顿、墨尔本、东京和埃克塞特这一部分已得到实施。非对称约束信息速率（CIR）对于匹配不平衡的报量是经济有效的。委员会注意到目前提供商的合同将在 2007 年底结束。利用 64 kbit/s 数字化租赁线路，RTH 巴西利亚和布宜诺斯艾利斯目前与 RTH/WMC 华盛顿实现了连接，可以借此时机在当前合同截止时考虑将两者纳入之事。与 RTH/WMC 莫斯科的连接是下一步计划。委员会提请秘书长在 2007 年初为 IMTN“云 I”中心组织一次实施协调会，以推动向新合同安排的过渡。

6.2.45 通过扩展六区域-RMDCN 有管理的数据通信服务实施了“云 II”。ECMWF 根据 WMO/ECMWF 之间达成的协议正在管理着 RMDCN，并代表所有参与中心负责监督服务质量，让承包商遵守“服务水平协议”。委员会赞赏地注意到对主 RMDCN 合同重新进行了谈判并作了修改，使成本效益得到显著提高，IMTN“云 II”得以受益。委员会还注意到拟将“云 II”向先进的数据通信网络服务（MPLS）过渡的计划。

6.2.46 委员会注意到 RTH 达喀尔已决定不加入 RMDCN，因为已经实施的通过扩展 VSAT SATCOM 网络实现达喀尔—图卢兹电路升级的方案在当时更具有成本效益。RTH 内罗毕已通过扩展国内 VSAT 网络实

施了内罗毕—奥芬巴赫 MTN 电路的升级。委员会获悉 RTH 阿尔及尔和开罗正计划加入“云 II”有管理的数据通信服务。委员会提请秘书处为 IMTN“云 II”的非洲国家组织一次实施协调会。

6.2.47 委员会满意地注意到在实施 IMTN 项目方面所取得的进展，并对有关 NMHS 致力于整个 GTS 的升级和 FWIS 的有效组块所开展的合作和取得的成果表示深切的谢意。

通信技术和服务

6.2.48 OPAG-ISS 为改进 GTS 审议了通信技术和服务的发展。委员会特别注意到有几家 NMHS 为国内和国际的资料通信系统采用了以卫星为渠道的数字化音频广播（DAB）和数字化视频广播（DVB）技术，这说明它们对 GTS 水平的提高是合适和经济有效的。

6.2.49 委员会注意到新兴的、先进资料通信网络服务的特点，特别是 MPLS（多协议标签转换），它在世界上的部分地区正快速取代帧中继网络。委员会注意到 MPLS 具有实现任意两点之间连接的潜在能力，并对各 GTS 中心之间的报量管理带来新的机遇和挑战。委员会要求 OPAG-ISS 研究其全面影响，同意根据这些新兴能力并针对 WIS 对报文和文档在 GTS 上的交换和发送机制进行研究。其目的在于改进高优先级资料和产品的交换从而为 WIS-GTS 框架内的虚拟全灾害网络提供支持。

气象活动的无线电频率

6.2.50 委员会强调指出，随着新兴商业化无线电通信系统的日益发展、扩大，特别是超宽带（UWB）装置，即：超大带宽的无线电通信系统，分配给气象系统和环境卫星的全部无线电频段所受到的威胁将会依然存在。

6.2.51 委员会非常赞赏地注意到无线电频率协调指导小组（SG-RFC）在筹备将要召开的 2007 年世界无线电会议（WRC-07，2007 年 11 月）中开展的活动以及它在区域层次上积极参与保护分配给气象系统和环境卫星的无线电频段。它满意地注意到组织了一次气象无线电频率研讨会（包括气象援助和气象卫星在通用波段方面的共享内容）（2006 年 2 月，日内瓦）。SG-RFC 正在与 ITU 协调最终完成对《气象射频频谱使用手册》的更新工作，更新后的信息将张贴在 WMO 和 ITU 网站上。修订后的手册将成为 WRC-07 筹备工作和会议上的重要参考文献。委员会还满意地注意到 SG-RFC 的活动是对 GEO 各项任务的重要贡献。

6.2.52 委员会注意到 WRC-07 的议程中包括一些对 WMO 极为重要的议题。最重要的问题是涉及对 2700-2900 兆赫(气象雷达)频段的威胁和对空基无源传感频段的保护问题。委员会注意到并赞同由 SG-RFC 起草的并已提交给相关 ITU-R 小组的 WMO 在 WRC-07 上的立场文件；并将把该文件分发给 WMO 会员和相关国际组织，以便有效地准备对 WMO 相关问题有利的本国 WRC-07 立场文件。委员会回顾了执行理事会敦促所有的 NMHS 和气象环境卫星运行商尽力保护对 WMO 至关重要的频带分配结果。委员会赞赏地注意到，WMO、气象和研发卫星机构及一些 NMS 积极参与了 ITU-R 活动。关于决议 3（Cg-14），EC 敦促会员积极参与国家、区域和全球在无线电频率方面的活动（如 ITU-R），以确保气象和相关环境方的利益得到保护。

6.2.53 委员会确认了让 NMHS 了解气象系统使用的各种无线电频带问题的危急程度具有重要意义。委员会敦促会员确保各自的国家无线电通信当局充分认识到有关问题对气象业务的影响，并寻求他们在

WRC-07 相关问题上的支持。委员会要求无线电频率协调指导小组继续积极开展活动，重点是 WCR-07 的筹备活动，包括计划于 2007 年 2 月召开的 ITU-R 大会筹备会（CPM）。

元数据标准

WMO 核心元数据标准

6.2.54 鉴于元数据对 WIS 的极端重要性，第十四次大会要求 WMO 所有计划在进一步制定详细的 WMO 元数据标准中携手努力。委员会注意到已邀请 WMO 各技术委员会指定专家代表各委员会加入 CBS 元数据实施跨计划专家组（IPET-MI）。

6.2.55 委员会赞赏地注意到 IPET-MI 编制了 ISO 元数据标准中的 WMO 核心元数据标准 1.0 版草案[1]。委员会同意将该版本指定为"正式的 1.0 版"，并将以三种格式放在 WMO 服务器上：文本格式、基于 ISO 19139 标准的 XML 格式和 UML 格式。

业务信息目录

6.2.56 WMO 核心元数据标准 1.0 版为其信息使用了简单的目录：除了相关 ISO 标准所要求的外，提供了关键字汇编、*CCCC* 国家代码表和地名辞典，以方便将站点名称、站点标识符和站点编号翻译成地理位置。委员会邀请 OPAG-ISS 与 OPAG-IOS 协商，利用元数据优先进一步开发几种反映与观测站有关的全面信息的方法，如某个标准观测站测量的变量的目录或标准观测站用来测量变量的仪器的目录，尤其是：

(a) 基于《国际气象词汇表》（WMO-No. 182）和《技术规则》（WMO-No. 49）对关键字/关键短语使用明确和标准的术语；

(b) 出于各种理由维护站点历史，如为监测气候变化保持日期时间序列的均一性；

(c) 跟踪站点资料的变化（即站点的元数据），这可以每天跟踪，不具备这种能力将对结果产生负面影响。

6.2.57 委员会要求 OPAG-ISS 为目录的创建和维护考虑合适的编辑。

实施 WMO 元数据标准

6.2.58 委员会邀请 OPAG-ISS 牵头寻找能允许用户创建元数据文件的工作。重点应是能够自动化"收获"常规资料的工作，因为这是 GISC 原形加工所需要的。还必须设立一名编辑来人工创建元数据。还应发展 WMO 各计划的培训工作，以便用适当的方式创建元数据；还需要有一份"最佳规范"指南。

利用相关的 ISO 元数据标准，尤其是 ISO 191xx 系列开发 WIS，

[1] 该标准可参见http://wis.wmo.int。

6.2.59 把 ISO 191xx 标准发给 OPAG-ISS 其他小组的活动已纳入到 IPET-MI 的工作计划中。IPET-MI 的工作计划中包括了准备在 2.0 版中采用这些特点的行动。

与 ISO TC 211 的互动

6.2.60 委员会注意到需要对 ISO 19115 作时间问题拓展。应有一个 WMO 会员国要求 ISO TC211 增加一项工作议题以包括上述问题。

其他 WWW 资料管理问题

6.2.61 委员会回顾了《WWW 资料管理指南》的修订内容。在业务信息服务的总体框架下，应将该"指南"设计成电子出版物，且只保留"指南"中那些介绍最佳规范的内容。应通过查询网上现有的其它信息源的方式来将资料管理其它方面的指南间接地包含进来。委员会认为，掌握每个主题关键知识的 CBS OPAG 和专家组应在 OPAG-ISS 的协调下并在秘书处的帮助下承担编辑指南各部分的任务。委员会要求 OPAG 为指南的相应更新做出贡献。委员会还同意目前的指南曾充分发挥了作用，但目前已过时，应当从 WMO 网络服务器上摘除。

资料表示和电码

6.2.62 委员会赞赏地注意到资料表示和电码专家组(ET/DR&C)的工作，并对专家组组长 Milan Dragosavac 先生（ECMWF）表示感谢。

《电码手册》的修改

6.2.63 委员会回顾了在其特别届会（2002 年）上达成的方案，根据该方案，确定了一个分三步走的机制对 BUFR、CREX 和 GRIB 2 诸表作修改：（参见*基本系统委员会 2002 年特别届会含决议和建议案的最终节略报告*(WMO-No. 955) 第 6.2.66 段）。委员会注意到 ET/DR&C 和 ICT/ISS 关于增加资料表示表的工作结果和建议，包括在休会期间批准增加的供业务前使用的表，内容摘要见下列段落。

FM 92 GRIB 第 2 版

6.2.64 根据各种需求，委员会同意 GRIB 2 诸表所增加的一套参数，这些参数用于 THORPEX TIGGE 外场，用于火险探测和晴空辐射卫星资料，也用于紫外线指数场和额外降水场。委员会同意增加新的模板，用于无损失 IEEE 浮标数据打包和简式数据打包，并同意设立一个新体系，界定业务前诸表的主表版号。委员会还提出了新的参数和一个新的规定，以确保参数定义的正交结构（参见 (CBS-Ext. (06) 建议 4 的附录 1)。委员会同意了 ICAO 的要求：延长 GRIB 1 的使用，让航空产品的用户使用到 2010 年 11 月，因为到 2008 年 11 月时，做不到让所有国家具备 GRIB 2 所需的设备和软件。委员会赞赏地注意到 EUMETSAT 已经决定所有云图类产品将用 GRIB 第 2 版进行编码，并且由主要中心生成的 GRIB 2 格式的产品数量会不断增加。

FM 94 BUFR、FM 95 CREX 和通用电码表

6.2.65 委员会同意增加 BUFR/CREX 诸表的内容，以满足各种需求。建议为 BUFR 模板的 SYNOP（包括区域的实际需要）、SHIP 和浮标观测、CLIMAT、CLIMAT SHIP、CLIMAT TEMP 和 CLIMAT TEMP SHIP 资料增加通用序列。还对卫星资料提出了大量增加的内容，特别是用 MHS、IASI 和 ASCAT 仪器获取的欧洲极轨卫星生成的新资料。根据日本的要求，对用 BURF 报告卫星和雷达（SAREP 和 RADOB 资料）热带气旋观测资料以及报告 TRACKOB 船舶资料提出了补充内容。提出了在 SIGWX 报中用于报告湍流的延伸幅度并用 BUFR 来传输 SIGMET 的描述符。对某些 BUFR 规定的解释已得到批准。对测量 SST 的船舶用温度传感器的高度提出了附加内容，对名义值的表示以及廓线浮标纪录的温度和盐度廓线作了补充。（参见建议 4(CBS-Ext. (06)的附录 2)。

在业务上实施二进制码和共同特征修正案

6.2.66 委员会通过了建议 4（CBS-Ext. (06)）- 《电码手册》 修正案，第 I.2 卷，内容为 FM XIII GRIB 2、FM XIII BUFR 和 FM XIII CREX，并建议于 2007 年 11 月 7 日在业务上实施这些修正案。

修改 FM 15 METAR、FM 16 SPECI 和 FM 51 TAF

6.2.67 根据 ICAO 对附录 3/技术规则[C.3.1] 第 74 号修正案所表示的要求，委员会建议对 METAR/SPECI 和 TAF 电码进行修改，供 2008 年 11 月 5 日实施（参见 CBS-Ext. (06)建议 5 的附录)。委员会通过了建议 5 (CBS-Ext. (06)) – 《电码手册》修正案，第 I.1 卷。关于航空电码修正案的实施日期，委员会感到高兴的是 ICAO 同意统一附录 3/技术规则[C.3.1]修正案的实施日期和由 CBS 提出的电码修正案的实施日期。

以表驱动电码格式（TDCF）报告传统观测资料的规定：BUFR 或 CREX

6.2.68 关于 TDCF 过渡对《电码手册》的影响，CBS-13 已重申有必要调整和更新当前的报告规范：从传统的字母数字电码（TAC）转变为 TDCF，并同意将区域性/国家性规范纳入 BUFR 模板；这将特别有助于开发自动编码系统。一套采用 BUFR 或 CREX 报告传统观测资料的规定已由 Eva Červená 女士经与 ET/DR&C 成员磋商制订了出来，并已经得到 OPAG ISS 的批准。委员会对 Cervena 女士所完成的任务表示赞扬，并建议将这些规定（参见 CBS-Ext. (06)建议 6 的附录)纳入《电码手册》第 I.2 卷，成为 C 部分‘二进制码和字母数字码的共同特征’中新的第 D 章，但是只放在 WMO 的网站上。委员会通过了建议 6 (CBS-Ext. (06)) – 《电码手册》修正案，第 I.2 卷，C 部分，二进制码和字母数字码的共同特征，并建议于 2007 年 11 月 7 日在业务上实施上述修正案。

向表驱动码格式过渡 (MTDCF)

6.2.69 委员会赞赏地注意到表驱动码格式过渡协调组所完成的工作并且感谢协调组的组长 Fred Branski 先生（美国）。

6.2.70 委员会忆及第十四次大会通过了 CBS 制定的过渡计划；但是 CBS 注意到各会员国在执行过程中，甚至在许多情况下在制定国内的过渡计划时遇到了各种困难。国家计划的制定可参照国际计划，并对影响、成本、解决办法、资金来源（必要时）、国内培训、技术规划以及时间进度进行分析。委员会注意到从 2005 年 11 月 2 日开始业务交换过渡资料，这是一个非常重要的里程碑。委员会还注意到得到交换的 BUFR 报多于记录在 WMO 监测文档中的数量，尽管前者数量仍很少。

6.2.71 委员会审议了使 WMO 会员的过渡计划实施进度放缓的困难。委员会注意到一些拥有技术的会员尚未开始过渡。发展中国家需要从发达国家的经验中受益。委员会认为在过渡活动中存在一个宣传问题。区域协会、ISS 区域报告员、资料管理（和/或电码）区域报告员以及 RTH 联络员应该有系统地参与并了解有关信息。委员会要求 CT-MTDCF 准备一封信函，由秘书处发给各会员，信函包括两个附录：一个是 1-2 页的简明概要反映应当考虑和可能开展的主要行动或任务；另一个是过渡指导文件。过渡指导文件针对执行管理层，以提高他们对过渡计划和相关活动的意识，这份文件包括预期从向表驱动码过渡可获得的所有好处的列表。这将有助于更直接地参与向 TDCF 过渡各方面工作的专家了解各种要求和执行自己的行动。在指导文件中应当清晰地解释启动新的 BUFR/CREX 报的分发程序以及在 MTN 层面完成过渡的程序。

6.2.72 委员会强调各会员在向 GTS 插入新的 BUFR 和 CREX 报时应当通报 WMO，通报应采用目前使用的向 GTS 插入任何新报的程序。此举可以在 GTS 上分发有关的 METNO 信息，向各会员通报插入 GTS 的新的 BUFR 或 CREX 报，并更新 WMO 第九号出版物 C1 卷（气象报目录），此后还可更新 WMO 的监测文档。

6.2.73 委员会强调还有很多任务有待完成，尤其是帮助发展中国家。委员会强调非常需要具备一个供解码用的测试资料网址，并统一协调开展 BUFR 或 CREX 报文编码投入业务使用前的测试，以帮助会员开展业务实施。为向用户示范 BUFR 的优势，应当通过示范举出一个简单的应用实例。委员会要求 CT-MTDCF 在这方面采取行动。几个会员强调需要无偿获得能在视窗操作系统下运行的交钥匙编码/解码软件。应当研究通过一些合作机制（信托基金、VCP 等）为发展中国家的过渡工作提供财务援助。

6.2.74 委员会还强调应在区域层面系统地采用一个协调方案，而且应当协调国家间的各项过渡计划。NMHS 用来收集资料的所有新工作站应该具备解码和显示 BUFR 的能力。

6.2.75 委员会高兴地注意到，在 2003 年-2005 年期间所有 WMO 区域的 183 个国家中，至少有一人参加了 TDCF 培训的国家总数为 100 个。由于迫切需要软件和设备生产厂家正确地实施 BUFR 和 CREX 资料处理程序，委员会强烈建议举办一次针对这些团体的培训研讨会。CBS 很高兴的注意到 HMEI 协会的代表作为观察员为上一次过渡协调组会议提供了支持，现在已参与了该协调组的工作。委员会注意到有些区域需要增加培训，因此要求秘书处采取所有可能形式的 TDCF 培训，包括计算机辅助教学和网络服务。委员会呼吁发达国家为此提供支持。

6.2.76 委员会感到高兴的是，一些非洲国家，作为一个临时解决方案，正在尝试用 CREX 格式编码的 SYNOP 观测。在非洲西部，CREX 也正被用来报告飑线。委员会建议在尚未开展培训的国家完成培训并在一区协重复开展培训。ASECNA 的代表介绍了该机构在推动它的各个成员国向 TDCF 过渡的计划。它报告了拟组织几次 TDCF 培训活动的计划，并希望 WMO 与其联合举办。

6.2.77 委员会建议开展一些试点项目旨在帮助发展中国家。这些称为过渡执行计划（MIP）的试点项目一旦按确定的结果完成实施后应予以支持。

6.2.78 委员会感到高兴的是，过渡协调组根据自己的职责协调了与其它相关国际组织的活动。为了协调、达成共识并解决一些具体电码的过渡问题，协调组与 ICAO，CAeM，IOC，JCOMM 和卫星运营方始终保持联系。委员会注意到 ICAO 希望把实现向 BUFR 过渡的目标定在 2016 年。新提出的过渡时间表见本报告附录 I。

6.2.79 考虑到要求采用现代工业标准的呼声，如 XML， EC-58 要求 CBS 着手满足用户部门对资料表示方式的需求。委员会注意到航空界新的需求，此问题需通过与 CAeM 和 ICAO 协调解决。委员会还注意到一些国家关于使用 XML 和 NetCDF 的报告；委员会决定研究这些资料格式的使用对气象资料带来的真正影响，尤其是对业务气象实时交换的影响，并评估在开发上所需的努力和资源。委员会要求其管理组在 OPAG-ISS 内部设立一个专家组，以评估各种利弊，包括用于 NMHS 之间的实时业务国际交换和 NMHS 向外部用户传输信息的不同的资料表示系统(如 BUFR，CREX，XML，NetCDF，HDF) 的影响（有必要确定标准化、资料处理的开发和整合、成本和效益：灵活性、压缩、实施可行性等）。专家组应根据资料交换的类型就最适合的系统提出建议，并就向 TDCF 过渡可能产生的影响提出报告。WMO 各技术委员均应参加这个特设专家组。

6.2.80 委员会要求其管理组与 ICAO 协调，在 CBS 和 CAeM 的相关专家组之间抓紧建立跨委员会的对话机制，从而讨论航空专家们提出的在从 OPMET 码过渡到 TDCF 方面存在的问题。

未来活动

6.2.81 委员会审议了 OPAG-ISS 在即将来临的 CBS 休会期（2007-2008 年）内的关键任务（参见议题 11）。

6.3 资料加工和预报系统（DPFS）包括紧急响应活动（ERA）*（议题 6.3）*

6.3.1 委员会注意到，OPAG-DPFS 在其主席 Bernard Strauss 先生（法国）的领导下所取得的重大进展，包括 ICT-DPFS、EPS 专家组、长期预报（基础设施、检验）专家组、核紧急响应活动协调组、非核类紧急响应活动大气输送模式专家组、NWP 在灾害性天气预报中的应用报告员以及灾害性天气预报示范项目指导组的工作所取得的重大进展。

预报标准和推荐规范

6.3.2 委员会注意到，第 14 届大会认为 WMO 天气预报技术标准和/或建议规范的制定将有助于通过使用目前最先进的气象科学和技术制作出更可靠的预报。下列两份文件已编写完成，会员可通过 WMO 网站获取：

- “使用单个高分辨率 NWP 预报 EPS 信息的指南”（2006 年 2 月）；
- “天气预报推荐规范摘要”（2004 年 11 月）

6.3.3 委员会注意到，审议和修订 WMO GDPFS 指南（WMO-No.305）需要一批专家和/或适当的顾问。更新的指南作为网上调用的文件，最好能通过 WMO 网站提供。

6.3.4 委员会获悉，世界天气研究计划（WWRP）的目的是开展“预报系统”方面的工作，它与按预报标准进行开发有关，并能够从中获得潜在的益处，委员会认为，DPFS 计划应参与拟在 2007 年举行的联合会议或研讨会。

集合预报系统产品和应用

6.3.5 委员会获悉，14 个 GDPFS 中心在运行集合预报系统（EPS），有些在运行多系统，其产品引起了 WMO 所有会员越来越大的关注，因为 EPS 产品可以量化大气数值模拟和预报中的不确定性。

6.3.6 委员会再次强调很多 NMHS，尤其是发展中国家的 NMHS，仍然需要使用 EPS 产品方面的培训和能力建设，以从中受益。例如，一种理想的方式是在 EPS 制作中心建立一个国际培训科，类似于在 NCEP（美国）建成的非洲科或热带科。

6.3.7 EPS 在模式判定、不确定性计算方法、预报的时间尺度及应用方面的不断发展对于所有时间尺度的天气预报，即短至长期预报，非常重要。将不确定性纳入所有预报的概念需要推广给决策者和管理者，而他们则可对概率预报提出新的要求，并将它们作为提供天气信息、预报和警报的一部分。

6.3.8 鼓励 WMO 会员获取 GDPFS 中心的 EPS 产品，同时鼓励这些中心为其各自的 EPS 网站提供访问信息。

6.3.9 为响应 CBS-13（2005 年）寻求的指导，编写了一份文件，名为“使用单个高分辨率 NWP 预报 EPS 信息的指南”，该指南包括下列重点：

- 预报员可以根据集合中的离散度评估赋予高分辨率单个预报（或集合控制）多大加权值。集合中的离散度小则给单个预报提供了可信度，而较大的离散度表明，吸收预报不确定性的信息十分必要。

- 当离散度加大时，多数情况下（不论是高分辨率或集合控制预报）不适宜依赖单个预报。在权衡不同预报情况的可能性时，必须要考虑集合中的所有解决方案。然而，直到集合显示提前时间量有大的预报不确定性为止，多数情况下可使用高分辨率控制预报。

- 后处理的目的是考虑来自高分辨率单一模式运行和 EPS 成员的信息，得出概率分布函数。总之，期待在短期预报中赋予高分辨率预报较高的加权值，而赋予扰动成员较低的加权值，因为这些成员的较长期的预报将使所有成员都会具有类似的权重比。

6.3.10 委员会注意到， EPS 区域合作可以促使形成一个能够专门为次区域的 NMHS 提供 EPS 产品的 EPS 中心。例如包括：

- COSMO-LEPS，它可提供 ECMWF 全球集合区域降尺度；

- EUMETNET SRNWP-PEPS 项目（融合不同国家的区域尺度模式数据的简单集合）；或

- 在普拉塔地区开展合作（主超级模式集合系统）的南美中心。

6.3.11 由于一些 EPS 制作中心在开发和提供国家需要的灾害性天气应用诊断方法和产品，委员会鼓励这些中心或向其它 NMHS 提供其中的一些应用，或是提供其 EPS 产品或数据集，并且帮助这些 NMHS 开发有关其本地区利益的合适的灾害性天气预报工具。范例说明可编成文件提供给 NMHS。为此注意到，多业务中心的北美集合预报系统（NAEFS）将制作并在其网站上分发天气预报信息，包括用于灾害天气警报活

动的产品。

6.3.12 鉴于向发展中国家提供特定地点的 NWP 产品能够对进一步支持 GOS 起到促进作用，因此，委员会注意到 EC-57 要求（段落 3.1.1.5（C）（vii））CBS 考虑将此事宜纳入 WWW 计划。委员会注意到并赞同 CBS-MG-6（2006 年）承担一项额外的任务，即为供国际交换的图像产品（“EPS-grams”）制定指南和标准。

6.3.13 委员会鼓励 EPS 制作中心提供其它有关灾害性天气预报的附加产品，如 ECMWF 得出的极端预报指数（EFI）。此类新产品可能需要额外的后处理（“降尺度”），而且对于全球所有地区而言，可能不必对此类产品作全面的评估，然而制作中心可以将这些产品附加适当的说明予以提供，并请用户提供反馈。

6.3.14 委员会注意到日本气象厅使用两个因特网站来管理 EPS 检验牵头中心：用于收集 EPS 检验统计资料的 FTP 地址（ftp://ftpepsv.kishou.go.jp/），另一个是用于公布结果的万维网站（http://epsv.kishou.go.jp/EPSproducer/）。鼓励 EPS 制作中心在牵头中心注册，同时如果制作中心尚未向牵头中心提供其检验资料，应尽快着手进行。通常，万维网站和 FTP 站点都有密码保护，只有注册的中心才可登录。委员会认为，应让 WMO 所有会员均可访问该万维网站。

6.3.15 委员会建议在 GDPFS 手册的现有段落（第一卷，第二部分，附件 II-6，第 4.1 段）中增加一种称为“EPSgrams”的 EPS 图像产品，并且为这些产品的国际交换制定标准或指南。对 GDPFS 手册建议的修订见建议 7 附录 1 第一部分(CBS-Ext.(06))。

6.3.16 委员会建议用修订的内容替代目前 GDPFS 手册中（卷 I 第二部分附件 II.7 表 F）有关 EPS 检验的内容。建议的修订见建议 7(CBS-Ext.(06))附录 1 第二部分。

灾害天气预报

6.3.17 委员会注意到灾害天气预报示范项目（SWFDP）所取得的进展，包括成立项目指导组，该指导组制定了总体项目计划并编写了文件，名为“SWFDP 规划区域子项目指南”。

6.3.18 委员会注意到，首个 SWFDP 区域子项目将于 2006 年在非洲东南部地区实施，且重点放在与热带气旋无特定关联的强降水和强风。下列各中心参与了这个区域子项目：

- 博茨瓦纳、马达加斯加、莫桑比克、坦桑尼亚和津巴布韦的 NMC；
- 比勒陀利亚 RSMC、留尼汪 RSMC、ACMAD；
- 全球产品中心：ECMWF、英国气象局、NCEP（美国）。

6.3.19 2006 年 10 月 31 日至 11 月 3 日在比勒陀利亚（南非）RSMC 召开了预备培训班。2006 年 11 月 6 日比勒陀利亚 RSMC 开始发布新的日常灾害天气预报指导产品，同时全球产品中心开设了专门的网站/ftp 站点；通过比勒陀利亚 RSMC 设置的带密码保护的网站入口可以访问这些站点。

6.3.20 会议同时注意到，该项目通过更好地理解和使用 NWP 和 EPS 的产品为 NMHS 的能力建设做出的

显著而具体的贡献，同时它为改进与灾害管理部门和民防管理部门之间的互动提供了机会，从而为提高 NMHS 的知名度提供了支持。例如，南非气象局注意到，通过 SWFDP，它们得到了政府很大的支持和关注。

6.3.21 委员会建议 SWFDP 应该让民防管理部门参与，以改进灾害性天气警报服务的发布。在此方面，委员会鼓励与 PWS 和 DPM 计划开展合作。

6.3.22 委员会得知 NCEP（美国）的非洲科通过大量的活动为 SWFDP 提供了直接，这些活动包括：

- 为预备培训班计划提供专家讲座，
- 实时提供全球产品，包括 EPS，
- 在 NCEP 的非洲接纳和培训来自非洲东南部地区的预报员。

6.3.23 委员会得知 ECMWF 为 SWFDP 提供专门的灾害天气指导产品，包括 EPSgrams、概率图表以及极端指数预报（EFI），并告诫对于在非洲东南部的精度和准确性他们经验不足；要求参与的地区和国家中心给予反馈。

6.3.24 委员会得知英国气象局正在提供大量的指导产品，尤其是建立了一个覆盖南部非洲的“Africa-LAM”视窗。

6.3.25 委员会注意到会议热情地赞赏所有全球产品中心（ECMWF、英国气象局、NCEP-非洲科）以及比勒陀利亚 RSMC 的积极参与，其目的在于为项目的地理区制作和执行 NWP 和 EPS 指导产品，并提供关于产品的培训。同样，委员会注意到与会的各国家中心承诺全力参与该项目。

6.3.26 SWFDP 提供了一个重要的机会，以证明、学习并改进灾害性天气预报的“级联”过程。因此，灾害性天气事件的档案整理十分重要，从而可以进行案例研究来确定一些方法，用以改善灾害性天气发生地区和种类预报过程的方方面面。委员会认为，在有关中心的参与下，确定并开发各种案例研究，这对该项目需优先考虑的事项。

6.3.27 注意到在多数国家灾害性天气警报的精度和时效越来越重要，委员会建议，如果 SWFDP 获得成功，其概念应扩展到 WMO 的其他区域，尤其是发展中国家。而且，NMHS 应尽全力改善灾害性天气预报的过程、方法和警报管理体系，以有效地满足减灾部门的需要。

6.3.28 委员会获悉 GEO 工作计划有一个要点，就是要在世界所有区域的 NMHS 中协调各个 NWP 能力建设倡议（培训活动），以达到大幅改善某些地区能力建设水平的目的。

6.3.29 另一个区域子项目将着重于预报与热带气旋有关的灾害性天气，并将在首个子项目实施后予以考虑。

长期预报

6.3.30 在 GDPFS 手册中，指定专业活动 RSMC 包括“长期天气预报”（产品）。委员会同意在该手册中加

入注释，以阐释这条涉及 LRF GPC（卷 I 第二部分 1.4.1.2 段（b））的附注。建议 7(CBS-Ext.(06))附录 2 第一部分给出了建议的修订。

6.3.31 委员会建议，将全球长期预报制作中心（GPC of LRF）的指定标准和指定的 GPC 名录纳入手册作为新的章节（第一卷，第二部分，附件 II-8）。建议 7(CBS-Ext.(06))附录 2 第二部分给出了建议的修订。

6.3.32 委员会注意到，澳大利亚、加拿大、中国、法国、日本、韩国、美国、英国的常任代表及 ECMWF 主任要求指定其各自的中心：墨尔本、蒙特利尔、北京、图卢兹、东京、首尔、华盛顿、埃克塞特和 ECMWF 作为长期预报全球制作中心（GPC-LRF）。委员会获悉这些中心履行 GPC-LRF 职能所正式承担的义务。委员会对上述中心的能力展示表示赞赏，并在审议过这些中心的成就之后认为，它们已符合指定程序的相关规定。因此，委员会建议指定所有这些中心中为 GPC-LRF，并通过建议 8（CBS-Ext.（06））。

6.3.33 委员会赞赏地注意到俄罗斯联邦和南非希望将各自的莫斯科和比勒陀利亚的中心认可为长期预报全球制作中心。委员会鼓励这些中心继续推动这项活动，以便在 2008 年的下届会议上根据其成就并在各自的常任代表向秘书处提交正式要求后得到正式认可。委员会还鼓励制作长期预报的其它中心努力达到 GPC 的资格标准。

6.3.34 委员会认为，要对 GDPFS 手册附件 II-6 中“GPC 须提供的最基本产品清单”进行修改，纳入一些必要的说明，而不对最基本产品清单作任何变动。这些产品应尽可能提供给更多的 NMC 和区域气候中心（RCC），以便使它们能开展工作。建议 7(CBS-Ext.(06))附录 2 第三部分给出了 GDPFS 手册建议的修订。

6.3.35 委员会注意到，除最基本产品清单中所要求的产品以外，GPC 还可以根据 RCC 或 NMC 的要求提供其它资料或产品；RCC 和 NMC 应具备获取 GPC 所提供的这些资料和产品的条件。本报告附录 II 给出了该补充产品清单。

6.3.36 考虑到下列中心（墨尔本、蒙特利尔、北京、图卢兹、东京、首尔、华盛顿、埃克塞特和 ECMWF）所取得的成绩，委员会同意将这些中心纳入 GDPFS 手册作为 LRF 全球制作中心。

6.3.37 委员会认为利用多模式集合（MME）进行长期预报（LRF）是值得的，因为：

- 相对于只使用单一模式集合，MME 能够有机会获得可靠性更高的 LRF；
- MME 为评估 LRF 的不确定性提供了机会，而且能够确定 LRF 的局限性；
- MME 为 LRF 领域“建立可信度”提供了一种手段；以及
- 使用 MME 可以实现技术的更大提高。

6.3.38 委员会认为，一些 LRF 全球制作中心可作为全球 LRF 资料的收集方以建立 MME。此类中心应履行下列职能：

- 从参与 GPC 中收集全球后报和预报，并将其提供给作为注册用户（用密码登录）的其它 GPC、

区域气候中心（RCC）和 NMHS；

- 促进在 MME 方面的研究和经验的交流，并提供关于 MME 的文献；
- 制定 MME 产品标准；
- 为 MME 的制作提供大量的 MME 技术，以支持 GPC 和 RCC；以及
- 以基于公认标准的统一格式向 RCC、NMC 和 GPC（用密码登录）提供 GPC 预报图。

6.3.39 委员会赞赏地注意到 KMA（韩国）和 NOAA（美国）的介绍，它们突出了两者作为全球 LRF 资料收集单位所开展的合作以满足将来对长期预报多模式集合（LRF MME）预测的业务要求，两者合作的目的在于希望成为在此方面的“主导”中心。委员会鼓励负责长期预报的全球制作中心（GPC）交换后季节预报和预报资料，并将它们提供给从事 LRF MME 预测的中心，尤其是要提供给首尔 GPC 和华盛顿 GPC，从而尽快推动开发工作。

6.3.40 委员会要求 OPAG-DPFS 研究认可“LRF MME 预测主导中心”的必要性，如果需要的话，则请其进一步完善和明确这种主导中心的职能，同时还要考虑到英国提出的在资料政策和向政府、用户和媒体提供预报信息的管理方面的问题。然后，潜在的主导中心有可能在 2008 年 CBS 的下届会议上得到正式认可。

6.3.41 委员会在其第 13 次届会上（CBS-13，2005 年）和气候学委员会在其第 14 次届会上（CCl-14，2005 年）承认，有些区域已开展了 RCC 实施试验项目，并认为在 2008 年年底前向 WMO 提出正式指定 RCC 的要求是可能的。委员会注意到，GDPFS 手册因此需对全球部分的内容进行修改，用相应规章制度及至少是 RCC 最基本、最小的职能的绩效和评估标准来阐述 WMO 某个 RCC 应履行的职能。委员会进一步注意到，RCC 的许多主要职能需要 GPC 可靠一致的产品及支持。为响应 CCl 提出的要求，委员会决定与 CCl 合作，在 CBS-14（2008 年）之前为手册作出相应的修订，以支持正式指定 RCC。

6.3.42 委员会获悉在过去的几十年里，印度气象局在全国成功地使用西南季风季节性降水的 LRF，每年 4 月发布，6 月更新。预报是利用本土开发的统计模型制作的。此外，2003 年 IMD 利用 ECPC（美国）的 T63 模式开发了动态预测系统，颇具功效。2005 和 2006 年该模式被用于全印度进行试验性预报。印度希望其国家气候中心被指定为 RCC，这样无论何时提出此类建议，整个 RA II 都会从该活动中受益。

6.3.43 委员会注意到，修订的列有制作全球 LRF 观测数据需求的指导说明（2006 年）已提交 CBS/OPAG-IOS、CCl 和 GCOS 审议。

6.3.44 委员会注意到，GDPFS 手册附件 II-8 中的长期预报标准化检验系统已得到审议。委员会建议，将作了必要说明和改正的各修正版本合并，作为对建议 7(CBS-Ext.(06))附录 2 第四部分中 GDPFS 手册的修订。

紧急响应活动

核紧急响应活动（核 ERA）

6.3.45 委员会注意到，在紧急响应方式中，传真仍是正式的产品传送方式，委员会进一步注意到维持目前的业务传真数量和联络人仍很困难。委员会同意，RSMC 和秘书处采取相应的行动，通过测试来确认业务联络信息并予以更新（通过与 WMO 常任代表通信联系）。

6.3.46 委员会注意到，所有 8 个 RSMC 均使用网络技术来交换信息和产品。某些 RSMC 已使用同样的（镜像的/相合的）但又有独立密码保护的网页，并在每月的演练中予以测试。此外，这些网页是以尽量将因互联网故障而造成的失败风险降至最低的方式运行，同时也考虑到 NMHS 登录能力的不同。委员会认为应将镜像网页的使用扩大到所有的专业活动 RSMC。

6.3.47 委员会获悉，WMO 参与了由国际原子能机构在 2005 年 5 月 11-12 日组织进行的 ConvEx-3（2005 年）国际演练。在演练期间，WMO 在固定区域和全球布局方面的表现被认为是出色的和尽职的。

6.3.48 委员会注意到，名为“RSMC 支持环境紧急响应文件（对象是 NMHS 的气象工作者）”的 WMO 技术文件（No.778）是 ERA 计划的技术参考文献，并认为它需要更新。

6.3.49 委员会注意到，虽然大气扩散预报方面的大气输送模拟技术对支持响应很多环境紧急事件至关重要，但包含“反向追溯”的同样的数值模拟技术的发展也已证明，它是确定空气传输灾害（已在监测点或通过遥感等一些其它方法探测到）可能源头的极为有用的工具。委员会认识到大气输送模拟技术的发展，并建议保留目前指定为环境紧急响应活动 RSMC，并更名为“大气输送模拟专业活动 RSMC”。该专业活动将包括支持环境紧急响应、对 CTBT 检验的反向追溯提供支持，向 NMHS 和相关国际组织提供其它的环境事件反向追溯支持。未被指定为 RSMC 但又希望被指定从事反向追溯的 WMO 中心请报名并附上证实其能力的支持文件。

6.3.50 委员会认为，组织和进行某一事件的反向追溯模拟实验有益于 RSMC。该实验作为一个起点还将有助于进一步研究获取和提供大气输送模拟反向追溯产品和服务的业务概念。

6.3.51 委员会建议修订 GDPFS 手册中有关紧急响应活动的各章节，特别是包括大气输送模拟反向追溯参考文献。建议 7(CBS-Ext.(06))附录 3 给出了建议的修订。

6.3.52 委员会注意到，与全面禁止核试验条约组织（CTBTO）筹备委员会的合作已取得成功，并进入 CTBTO-WMO 响应系统安装阶段，从而启动 CTBTO 放射性核素国际监测系统中关于放射性核素探测条约。在该系统中，WMO 各中心应 CTBTO 临时技术秘书处的要求，用“反向追溯”法使用大气扩散模式来计算有关国际监测网放射性核素测量“标准化放射源截获器灵敏度（SRS）”信息，并按要求在 24 小时内回复其结果。委员会同意作出有关大气输送模拟反向追溯的新安排，包括向 NMHS 提供 RSMC 服务，以及 CTBTO-WMO 反向追溯响应系统。委员会建议，应将新安排正式纳入 GDPFS 手册作为新的附件 I-6 和附件 II-9。这些建议的修订已被包括在建议 7(CBS-Ext.(06))附录 4 中。

6.3.53 委员会认为，RSMC 应继续推动它们之间数值资料的交换，这将使其它工具和方法的研究能够在质量上保证或促进 RSMC 的专门产品，包括环境紧急响应集合技术的潜在应用。

非核类紧急响应活动（非核类 ERA）

6.3.54 委员会获悉，化学事故主要都是局部的和短期的，非常快速的应急反应是必要的，因此提议最好是将战略重点放在提高 NMHS 的必要能力上。依靠空气传播的有害物质的跨界传输对 WMO 而言具有较高的优先级，例如在大火引发浓烟的情况下。区域划分的方式比较适合，所指定的 RSMC 将向 NMHS 提供紧急支持，同时建立起国家级能力。同样，对大型跨界沙尘暴而言， 可能也需要开展类似 RSMC 的业务协调。

6.3.55 委员会同意更新关于 ERA 计划的 WMO 技术文件 No.778 中的有关章节，如有关化学事件的气象方面的章节，该部分最初已获通过并被纳入 CBS-Ext.（98）总摘要，包括如下：

- 确定关于化学事故的需求（CBS-Ext.(98)附录 5）；
- 国家气象部门（在环境紧急响应方面）的作用（CBS-Ext.(98)附录 6）；
- 制定国家气象部门和其它紧急响应机构之间的相互关系指南，以防发生化学事件（CBS-Ext.（98）附录 7）。

6.3.56 委员会认识到与国际组织合作的重要性。在 ERA 计划的核部分方面与 IAEA 的合作以及在空气传输火山灰咨询服务方面与 ICAO 的合作证明，与有关国际组织强有力的联系对于在环境紧急事件方面成功提供气象支持服务是至关重要的。

6.3.57 委员会鼓励与联合国环境计划署/UN 人道事务协调办公室（UNEP/UN-OCHA）联合小组合作，例如可能在下列领域开展合作：

- 在紧急事件期间，直接向紧急响应机构提供更新的天气预报和必要区域的大气扩散模拟。在 OCHA 内部运行着有密码控制，所有紧急管理者均可登录的网站（虚拟现场操作和协调中心），并可用于提供气象支持产品；
- 应当开发 WMO 和联合小组之间的界面程序，包括一天 24 小时，每周 7 天紧急联络的具体情况，；
- 应由 WMO 向 UN 灾害评估和协调组提供有关空气传输的灾害的大气输送和模拟技术专业知识和/或培训。

6.3.58 委员会鼓励在世界卫生组织（WHO）的一些被纳入其国际化学安全计划（IPCS）的相关活动中继续合作，特别是在与开发中的非核类 ERA 业务框架有关的业务部分方面继续合作。

未来工作计划

6.3.59 委员会忆及到，在 GDPFS 手册中，“临近预报”的定义是目前至未来 2 小时天气预报，而宽泛而言，该术语特指未来极短时段，在该时段内使用各种技术来改进预报（如：在整个持续时段内）。而临近预报不仅有益于灾害性天气预报领域，其最大的重要性和相关性在于预报超短期灾害天气条件。

6.3.60 委员会注意到，临近预报依靠观测数据和系统、高分辨率 NWP 及图像处理类技术、数据融合、

数据分析、外推法和改进的强影响天气预报，如对流性灾害（大雨、冰雹、闪电、阵风等）、冬季天气事件（雪暴等）或其它灾害条件（雾、高火险、尘暴等）。支持临近预报的观测和高分辨率 NWP 的互相配合使用取决于天气现象、提前时间量及不断发展的实际天气事件。临近预报可以使用各种系统以及方法，包括从在单个 PC 机上作局部处理到建立专业中心。

OPAG-DPFS 工作结构及职责的发展

6.3.61 委员会注意到，其管理工作组在其第 6 次会议（2006 年 4 月）上认为，虽然目前的工作结构很适合短期目标，但考虑到 DPFS 的总体职责及新出现的需求，因而有必要对工作结构作出某些改变，以促进 DPFS 下各小组的工作，并促进与 CBS 内外其它小组的合作。

6.3.62 委员会认为，对 OPAG 作出如下改变能够提高计划的有效性：

- 设立甚短期预报专家组，研究有关新开发的分辨率仅几公里的业务模式的应用问题；
- 指定一个数值天气预报基础设施报告员，安排在 GTS 上建立 NWP 产品的交换，包括为 NMHS 运行的有限区域模式（LAM）提供嵌套数据集；
- 将目前的 LRF 基础设施专家组和 LRF 检验专家组合并为中期和长期预报专家组；
- EPS 专家组将更多的重心放在使用集合（或任何其它工具）制作概率预报，概括地说是制作支持决策的产品；
- 设立预报检验协调组，审议和更新目前计算 WMO 标准评分的程序，以及响应新的需求，如超高分辨率 NWP 模式的检验，特别是开发适当的程序以检验灾害性天气预报和警报，以及临近预报产品的检验。该组的专家还将参加大气科学委员会（CAS）中涉及 NWP 检验的相应专家组。该专家组将利用有关专家组提供的检验支持，如 EPS 产品或长期预报产品，并开展其它专家组未涉及的检验工作。

6.3.63 委员会强调，与 PWS 计划在某些领域的强有力联系是十分必要的，尤其在 EPS 领域及超短期预报领域，因为广大的最终用户将会从其发展中获益。

6.3.64 委员会同意对 OPAG-DPFS 的工作结构作如下修改：

- 资料加工和预报系统实施协调组；
- 预报检验协调组；
- 集合预报系统专家组；
- 数值天气预报基础设施专家组；
- 甚短期预报专家组；
- 中-长期预报专家组；
- 核紧急响应活动协调组；
- 非核类紧急响应活动大气输送模拟专家组；

- NWP 在灾害天气预报中的应用报告员。

6.3.65 委员会同意新的 DPFS 工作结构，但注意到，越来越多的专家组可能会带来财政负担。因此，委员会要求秘书处寻求有效途径，支持专家组和报告员的各项活动。

在 RSMC 产品中引进概率信息

6.3.66 委员会注意到，集合预报系统（EPS）输出产品的使用对预报灾害性天气和高影响天气有很大的帮助。NMHS 利用负责具体地理区域的 RSMC 的最终产品。这些 RSMC 目前对已确定性质的区域内的 NMHS 提供建议和产品。因此，根据这种规定，具有 EPS 产品(无论来源何处)解释技能的 RSMC 是不允许将这种知识传授给在 RSMC 地理区域内的 NMHS。委员会认为，尤其在灾害性天气事件的预报方面，NMHS 将从接收 RSMC 产品方面受益匪浅，而这些产品包含有关使用 EPS 资料的建议和解释意见。这种方法将把技术和专业知识传授给在使用 EPS 方面经验较少的 MNHS。

6.3.67 委员会要求 DPFS OPAG 对 EPS 专家组的职责范围进行修订，适时把概率信息纳入到地理 RSMC 的产品中。

6.4 公共天气服务（PWS）*（议题 6.4）*

6.4.1 委员会赞赏地注意到 OPAG-PWS 组长 Gerald Fleming 先生（爱尔兰）提交的报告，并回顾到 OPAG 的工作是通过三个专家组和一个实施协调组（ICT）予以协调。委员会赞扬各专家组成员根据大会和 CBS 的决议尽心尽责的工作，对 PWS 计划（PWSP）的不断发展及其所承担的新职责表示满意。

6.4.2 委员会强调，所有 NMHS 的首要目的是通过提供气象及相关的产品和服务来促进其各自国家的环境、经济和社会的效益和福利。因此，委员会认为，公共天气服务处在 NMHS 为与多灾害预警相关的人民生命财产安全、国家可持续发展、生活质量及环境质量保护等国家目标做出贡献的最前沿。为达到这些目标，委员会注意到，鉴于 PWS 有助于公众理解和教育并为气候和水服务产品的分发和传递提供了有效的机制，一些会员拓展了他们的 PWS 计划范围，涵盖了有关气候和水等其他服务领域，。

6.4.3 委员会强调，公共天气服务是 NMHS 的一项十分重要的工作，是通过每日定时提供和传送高质量的、有效的、相关和及时的天气和有关信息来履行这一职能，以便使用户能够作出及时、有充分依据的决定。委员会强调，畅通和可靠的公共天气服务将有助于 NMHS 获得公众的长期信赖，这对于在偶发灾害天气事件时发布的警报的效果至关重要。即使 NMHS 能向公众提供更为准确和及时的灾害天气预报和警报也不能满足需要。因此有必要既帮助 NMHS 改进其灾害预报，又与相关机构（包括紧急响应机构）协商，改进对灾害影响的预报，从而向公众提供协调一致的信息。委员会支持执行理事会的建议，即，制定指南，通过采用各种技术，如脆弱性评估和天气信息相结合来制作风险等级或影响预报，来帮助 NMHS 和相应的主管部门一起预报灾害性天气的影响，并运用相应的沟通战略建立公众对灾害和高影响天气风险的意识。

PWS 战略和相关事宜

6.4.4 在都柏林召开的 OPAG/PWS ICT 会议上（2005 年 10 月），该组为确保其工作与 WMO 战略计划相一致，而对 PWSP 及其职能进行了全面的审议。鉴于在服务提供方面出现的新趋势和需求，ICT 明确了

公共天气服务计划的战略，以便在今后若干年帮助指导该计划的工作。委员会与 ICT 一致认为，NMHS 是以建立和维护 NMHS 作为高质量服务提供者的地位和知名度来发挥其作用，所采用的战略途径如下：

(a) 出色地运用科学技术；

(b) 了解、尊重和响应用户的需求；

(c) 与利益攸关方建立关系；以及

(d) 在天气及相关产品和服务的提供方面建立信誉。

6.4.5 委员会审议了 ICT 所提出的方针，此方针将由 PWSP 采用，以便实施其如下战略途径：

(a) 改进作为 PWS 一个不可分割部分的早期警报服务和产品及其播报方式；

(b) 开展能力建设和宣传活动；

(c) 拓展范围，扩大 NMHS 的产品和服务范围，从而提高 NMHS 的知名度和可信度；

(d) 促进气象科学及其相关技术的应用以改进产品和服务；开展示范项目；

(e) 开展相应的合作活动；

(f) 制定和推广最佳规范；

(g) 研究、提供并宣传在社会和经济领域应用的天气信息；

(h) 公布 PWS 专家组和小组的工作成果；

(i) 着手调查和评估；

(j) 推广和强化 WMO 品牌;

(k) 推动高质量的管理，包括有关 PWS 产品和服务的检验。

6.4.6 委员会回顾到，CBS 管理工作组已批准了 PWSP 战略途径，并经执行理事会同意，同时要求秘书长支持其实施。因此，委员会批准了修订后的 PWSP 战略，并要求随附的工作计划体现在秘书处的工作计划中。委员会进一步要求 OPAG-PWS 与 WIS 密切合作，尤其是要注意 WIS 对 PWSP 战略的影响。

6.4.7 委员会注意到，会员要求在明确其国家 PWS 职责方面得到 PWSP 的指导，为响应此要求，ICT 已提供了两类服务供委员会审议。委员会同意下列定义：

国家 PWS 计划的核心部分：

(1) 提供基本的天气观测和预报以对人们的日常活动提供帮助，向其它相关政府部门提供灾害性天气警报和信息，使其履行保护其人民生命、生计和财产安全的职责；

(2) 开展教育、提高意识和防御活动，以便帮助人们最佳地使用预报和预警信息，并了解灾害性天气的潜在影响以及相应的减灾活动。

国家 PWS 计划的推荐部分

(1) 与相邻的 NMHS 交换并协调预警信息；

(2) 向在工作中需与媒体配合的所有 NMHS 人员提供天气播报培训；

(3) 开展质量保证活动，并将这些活动的成果用于改进产品和服务；

(4) 促进科研和用户之间的双向沟通，以便将科研成果更好地用于提高产品和服务，并鼓励根据用户需求制定 R＆D 计划；

(5) 建立和加强与媒体的合作关系，以确保能最大范围地提供 PWS 产品和服务。

PWS 服务和产品的改进

6.4.8 PWS 产品和服务改进专家组（ET/SPI）承担着广泛的职责，包括确定、报告和提供有关对新的改进产品新需求的建议，重点放在 PWS 的核心用户群体。专家组在其会议上（2005 年 5 月，纽约）已明确了需作出评估的若干重要领域，以便促进 PWS 产品和服务，包括对加强的数据和观测以及新技术的应用，提高分发能力、有效的公众教育计划以及 NMHS 与其它政府机构、私营部门和媒体之间的关系。

6.4.9 集合预报系统（EPS）的数据和产品有可能改变向用户提供预报信息的方式，但此类信息的使用和释用还面临着各种挑战。因此，对用户群的教育和与媒体的合作，对于改进向用户推荐使用概率信息并使之产生最大效益都是至关重要的（见段落 6.4.16）。委员会强调发展中国家和 LDC 需要大量支持以从 EPS 产品中获益。它强调具备 EPS 能力的主要 NWP 中心需要与较小的 NMHS 合作，开发一套产品及工具，以帮助它们有效使用 EPS。

6.4.10 检验是促进 PWS 产品及服务的一个重要工具。委员会获悉两个区域检验项目，即 WWIS 网站的六区协温度预报基本检验，以及二区协特定城市 NWP 预报实验项目。关于后者，二区协的 14 个会员参与了该试点项目，项目中的 Meteograms 由韩国气象厅、日本气象厅和香港天文台提供（见 6.4.31）。委员会认为，此类信息对于发展中国家极为有用，要求 ET/SPI 监督它们的实施情况和不断发展并就此提出报告。

6.4.11 委员会注意到，某些新需求并未充分纳入《生物气象学和空气质量预报指南》（2004 年），例如气象服务有助于管理和控制空气传播及水传播疾病。委员会要求，应该对指南作简要的补充以满足这一需求。委员会还要求，在出版*《PWS 质量管理程序和规范指南》*之后，ET/SPI 应开始评估该出版物对 NMHS 管理规范的影响。在讨论 NMHS 质量管理规范时，委员会对 ET/SPI 根据实施质量管理规范得到的直接经验和实施的益处以及 IT 管理标准信息收集到的范例表示欢迎。

6.4.12 数据库预报技术、使用 GIS 和 GDPS 技术的移动通信设施、可轻易订正观测资料的新一代预报工作站、临近预报和来自数据库的预报信息为整合 PWS 预报及服务提供带来了新机遇。委员会要求要特别重视这些新技术的培训，以使发展中国家和 LDC 能够最大限度的从中受益。委员会进一步要求 ET/SPI 及时掌握上述及其它能够帮助 NMHS 通过多种通信途径制作和提供 PWS 产品的新技术，并就此提交报告。

PWS 的通信方面

6.4.13 认识到与媒体保持良好关系的重要性以及使NMHS信息满足媒体需要的重要性，委员会赞同PWS沟通专家组（ET/COM）采取的制定“最佳规范”的方法。这些规范将展现良好的沟通方法、使用清晰和通俗的语言、NMHS 有效而不炫耀的属性以及各项新技术，如移动通信和“播客”（pod-casting）以及 PWS 产品和服务的有效播报和传送。委员会要求将这些范例提供给所有 NMHS。

6.4.14 委员会注意到专家组在媒体上进一步宣传 NMHS 的职责取得了成效。它特别赞赏地注意到中国建立了有 CMA 参与的中国卫星气象频道，并鼓励其他的 NMHS 尽可能地考虑采取类似的措施。委员会将 ET/COM 制作的*《天气广播和电台天气信息使用指南》*视为是向 NMHS 提供极有用的沟通技术资料的积极步骤，委员会要求广泛分发这些指南。

6.4.15 委员会特别关注发展中国家的需求，这些国家大部分位于热带地区，季节时间尺度和气候比日常天气更为重要，因此，使 NMHS 与这里的相关用户单位（如农业和卫生）紧密合作变得愈加重要。委员会强调，与这些用户单位建立有效的通信渠道对于确保 NMHS 在发展中国家的紧密联系至关重要。委员会要求，最佳规范应包括来自发展中国家的范例，并证明简单工具（如作为一种通信手段的 RANET）的效果。委员会特别强调通信和播报培训的重要性，并要求 ET/COM 应继续就如何最有效地开展此类培训提供指导，包括使用‘虚拟实验室’或‘交互式教室’。

6.4.16 认识到预报信息可以通过概率的形式表达和传播，但用户所作的决策通常是确定性的。通报 PWS 产品和服务存在的不确定性和可信度突显重要，但有时会忽视这个充满挑战的问题。因此，委员会认为，用户对不确定性信息（包括概率术语）的了解是一个可从某些明确的指南中获益的领域。委员会要求 ET/COM 制定一套通报概率预报不确定性和可信度有效方法的指南，其中应包括提高用户对概率信息以及此类信息图像显示的理解和作出的响应，并广泛分发该指南。

PWS 支持防灾减灾

6.4.17 在审议 PWS 支持 DPM 专家组的工作时，委员会强调 NMHS 是作为防灾减灾支援和预警管理方面唯一官方发言人最合适的权威部门。它审议了 WMO 会员为评估 NMHS 在灾害天气预警服务方面存在的差距与不足而于 2006 年 1 月与 ET/SPI 共同进行的调查。委员会注意到此次调查的结果，并得出结论：预警能否成功在于了人们行为的改变，其中教育是关键。为决策者和公众举办研讨会，对他们增强理解警报内容的能力，将其转化为有效行动的能力至关重要。委员会认为要改进短期灾害性天气现象预警，临近预报是重要的决策支持工具，并要求 OPAG-PWS 继续开展临近预报的能力建设。

6.4.18 为确定和明确 NMHS 在早期预警工作中的作用并编写参考资料，ET/DPM 已为 NMHS 制定了具体建议及关于将预警纳入风险管理指南。委员会支持专家组提出的建议，即应鼓励发达国家更多地向发展中国家（包括 LDC）的 NMHS 提供咨询和帮助。委员会要求将这些建议和指导材料广泛提供给 NMHS。

6.4.19 委员会坚决支持 ET/DPM 领导的关于临近预报的既定活动。会员的调查结果（见段落 6.4.17）为与 WWRP 临近预报工作组密切合作举办临近预报研讨会（2006 年 10 月，悉尼）提供支持。拟随后举办一个研讨会，通过公众教育和宣传满足减少对自然灾害的脆弱性这一迫切的需求。对此，委员会欢迎 PWS 参与由 OPAG-DPFS 组织的灾害性天气预报示范项目。

季节和长期天气预报的有效利用

6.4.20 英国代表团向委员会通报了英国气象局和英国政府之间为了确保向公众发布一致的 2005/6 年间冷冬预报所采取的措施。委员会欢迎扩大提供季节和长期预报的范围，并注意到很多会员都发布这些产品，委员会认为这些预报对用户十分有用，即使缺乏明显的证据表明会有反常天气。

6.4.21 委员会注意到英国气象局和英国政府在此项事宜的筹备工作。委员会强调，在发布有潜在强影响的季节预报时，及时向相关政府部门和公众有效地传递这些预报尤其重要。委员会认为，为确保这些预报及其附带的局限性得到有效的理解和发挥作用，对公众、媒体和专业用户的教育是非常必要的。尤其是，委员会建议应当适当地阐述和解释这些预报所伴随的局限性.

6.4.22 考虑到季节预报的地域广泛性，委员会请各会员加强在此问题上的区域协调，可以利用与 CCl 一起正在建立的全球预测中心和区域气候中心的结构。此外，注意到大众传媒的国际性，委员会建议，当某个从事长期天气预报的中心有意向媒体发布潜在的强影响预报时，应当提前与受影响地区的有关 NMHS 进行适当的协调。

公共天气预报和预警的国际交换

6.4.23 委员会回顾了开发世界天气信息服务（WWIS）和灾害天气信息中心（SWIC）网站所取得的进展。委员会回忆起必须建立这些网站以便鼓励大众并且使他们能够更好地使用媒体上的官方信息。到 2006 年 5 月末，WWIS 为 111 个会员的 1082 个城市提供了预报。SWIC 网站可以汇集官方的热带气旋警报和所有区域的暴雨及大雪信息，媒体也可以登录查询。委员会赞扬主办这两个网站的会员（中国/中国澳门/中国香港/阿曼/西班牙），特别是中国香港在继续从事网站的开发工作。

6.4.24 SWIC 网站得到了进一步发展，用于显示前 7 天热带气旋的位置，同时还增加了新的雷暴网页。委员会获悉，通过拼接 2005 年热带气旋档案中每 3 小时一次的网页已制作出区域和全球热带气旋路径动画视频，并获悉计划在 WWIS 网站上显示大风和极端温度。委员会要求将 ET/SPI 和 ET/DPM 编写的两个网站的用户指南提供给公众及主要媒体机构。

6.4.25 委员会敦促会员继续向 WWIS 提供信息，并积极参与 WWIS 和 SWIC 网站。据悉，法语的 WWIS 网站第二版正在编写中，并将很快交付使用，委员会认为，通过 WWIS 不同的语言版本，网站的信息可供全球用户调用。委员会鼓励有关会员之间通过定期协商密切协作，并应执行理事会的要求在 2007 年的 1 月为主办的 NMHS 组织一次协调会议，以确保该系统的协调发展。委员会要求 ICT/PWS 对召开更多协调会的要求进行审议。

6.4.26 委员会对 PWSP 和 EUMETNET 欧洲多服务气象意识（EMMA）项目（不久将更名为气象预警（MeteoAlarm））之间的积极合作表示欢迎。通过参加 EMMA 顾问委员会，PWSP 探讨了有关为 WMO 其

它区域建立 EMMA 概念、跨界预警阈值的协调统一、EMMA 项目和 SWIC 项目间的合作以及在确定用户对 EMMA 需求方面的合作等问题。作为合作的一部分，委员会建议，在 EMMA 网页投入业务运行之后，要建立起 SWIC 网页和 EMMA 网页之间的链接。

6.4.27 PWSP 已获悉 EU 的 GMES（全球环境和安全监测）项目，以及该项目给气象部门带来的机遇与挑战。在 GMES 中，令 PWS 计划特别关注的项目包括响应项目（RESPOND）和欧洲风险预览项目（EURORISK PREVIEW），前者旨在向人道主义机构提供地理信息，而后者旨在为紧急管理机构建立业务信息服务。委员会要求 PWSP 派六区协的代表参与 GMES 的工作，以便掌握各方面的动向。

PWS 的社会经济应用

6.4.28 委员会强调，公共天气服务包括向社会诸多领域的用户提供广泛的环境服务，为社会和经济应用的决策起到支持作用。委员会认为，天气、气候和水信息的提供方及用户之间需要更多的合作和交流，使此类信息对决策切实有效。为此，委员会建议秘书长通过建立“气象和水文服务的社会经济应用专题组”来响应会员经由 WMO 组织机构提出的将 NMHS 工作的重点放在社会经济方面的需求。委员会完全支持专题组通过制定方法和指导材料来具体协助会员为社会各界用户评估和展示其公共天气服务的社会、环境及经济效益。委员会支持执行理事会提出的要求，即专题组应继续采用分阶段工作的方法，逐步确定能够解决重要的供-需方问题的各种潜在机制。

6.4.29 PWSP 将积极促进 WMO 将重点放在 NMHS 的社会和经济方面的工作。委员会同意 PWSP 和专题组通过 WMO 全面参与主办天气、气候和水服务的社会与经济效益国际会议（2007 年 3 月，马德里）。委员会注意到 WMO 在一、三、五和六区协组织了许多关于气象水文服务的社会经济效益的区域会议，这也促成了马德里会议的召开。最后一次会议将于 2007 年 2 月在 Zagreb 召开，欧洲东南部的国家将参加本次会议，会议还得到了世界银行和芬兰气象局的支持。此外，委员会强烈建议通过诸如制作指导材料和为所有地区组织研讨会的方式让 PWSP 和专题组积极参与取得会议成果。

公众教育和宣传

6.4.30 NMHS 必须确保其预报和预警信息（包括隐含的风险和信息内在的不确定性）能够使决策者及最终用户明白并及时采取行动。在此方面，NMHS 要提高用户和公众对这些产品的现实期望。为此，委员会同意通过 PWSP，并与 ETR 合作，组建公众教育和宣传专家组，以便制定这些重要议题的战略和方针。该专家组应开发和促进基于网络的资源，并编写适合 NMHS 用于满足公共、教育、政策及决策机构的通用教材。这项活动的最终结果将有助于提高公众对预报和预警的信任度，也有助于促进公众进一步了解高影响天气或灾害天气对人们生命财产的潜在影响。委员会认可执行理事会提出的关于支持这项举措以及将专家组的工作成果广泛提供给会员的要求。

能力建设和培训

6.4.31 委员会认识到能力建设是 PWSP 的基本职责，因而预计会员对此项活动会有更多的需求。委员会要求，尽管资金有限，PWSP 要继续努力开展能力建设，特别是关于发展中国家和 LDC 的能力建设。委员会还鼓励发达国家在这些活动中向最不发达国家和发展中国家提供帮助。委员会尤其欢迎中国香港举办的关于天气图和类似产品的释用和使用研讨会，该会议是在二区协的 NWP 试点项目下组织的，在 WMO VCP

支持下有 10 个会员参加了该会议。委员会对于编写*《PWS 能力建设战略指南》*以及举办 PWS 区域培训研讨会和讲习班表示欢迎，并鼓励除了 NMHS 的工作人员外还应包括专业宣传人员及最终用户。委员会对曾主办这些活动和为之提供设施的会员表示感谢。

PWS 计划和 WMO 交叉活动

6.4.32 PWSP 积极地促进了 WMO 的各项交叉计划和活动，并通过与 WMO 的交叉计划以及其它计划（特别是 WWW、WCP、TCP、ETR、AREP 和 CAP）合作表明其自身就是交叉计划的一个范例。委员会要求 PWSP 继续利用此方法，并与其他技术委员会酌情建立更紧密的关系，尤其是与气候学委员会的应用和服务方面，以便为计划的开展节省资金并提高效率。

6.4.33 委员会对 PWSP 与 THORPEX 社会和经济研究与应用（SERA）工作组紧密合作并参与其工作表示欢迎。该工作组组长是气象和水文服务社会-经济应用专题组成员，而 PWSP 的益处通过 OPAG-PWS 组长参与 SERA 工作组得到体现。通过 THORPEX 国际项目办公室执行主任和主管参与 PWS ICT 会议使得与 THORPEX 的联系得到了加强。委员会强调，THORPEX 的主要用户群体是业务预报员，对他们需进行一定的培训，使他们认识多模式集合的潜在益处以及概率预报产品的最佳使用。委员会要求 PWS 计划在上述领域继续与 THORPEX 积极合作。

6.4.34 PWSP 通过向 GEO 工作计划提交名为“向公众传播水文气象灾害风险程度以便作出可靠决策的多媒体培训课件设计”项目，建立起了与 GEO 的合作关系。委员会要求不断报告该领域的进展情况。

6.4.35 PWS 计划的许多活动已对 WMO 防灾减灾的交叉措施提供了专门的支持。除了会员的调查之外（参见第 6.4.17 段），还制定了项目建议并已提交 DPM 计划，以便筹措资金。

与 CBS 其它 OPAG 的合作活动

6.4.36 委员会支持 OPAG-PWS 组长为寻求与 CBS 其它 OPAG 的合作机会所采取的措施。已经建立的一项合作安排是通过 ET/SPI 组长参与 CBS 灾害天气预报示范项目指导组（OPAG-DPFS）。委员会要求应加强此类安排。

PWS 国际研讨会

6.4.37 委员会认为，十多年来，PWSP 作为 WMO 的一项科技计划，其成果已得到会员的认可，为促进国家公共天气计划发挥了重要作用。委员会认为，当前应该对 PWSP 过去的成就作全面的总结，并为实施下一个十年的战略方案制定路线图。该路线图必须与气象学及相关技术的发展、优先重点的调整、业务模式以及 NMHS 重点领域相呼应。委员会注意到，执行理事会已对在第 15 届大会后举办 PWS 国际研讨会给予了坚定的支持，而且还要求秘书长为该研讨会的举办作出相应的安排。委员会也完全支持执行理事会作出的此项决定。

趋势、发展和新的需求

6.4.38 委员会强调，NMHS 有效履行国家赋予的职责必须要不断跟踪气象科学及相关技术的动态，以便

应对新趋势，并预测用户的新需求。为响应会员的需求，委员会要求 PWSP 对下列强调的问题给予特别关注。

6.4.39 为公众提供的新的预报产品，如临近预报产品、基于 EPS 的概率预报、中期预报和趋势/变化预报，其价值愈加重要。为获得最佳效果，这些产品必须要与有效的传播和提供方法相结合。因特网和无线广播作为实时提供临近预报产品的一种机制已获得公众接受，从而可以在天气状况不断变化的情况下对灾害作出评估，并确定拟采取的最佳措施。关键是使各地方的公众都能获得通俗易懂便于操作的信息。

6.4.40 EPS 产品越来越多地涌现为概率预报，特别是为潜在灾害天气风险评估开辟了新的可能性。对 PWS 产品而言，这些可以定量转换为概率指数或定性转换为可能的替代情景。尤其认识到发展中国家在使用和开发 EPS 产品方面需要得到帮助，委员会要求编写解释性指南，并应就此主题组织几次研讨会和制订项目。已经开始发布许多的天气预警和指数（如 UV、热浪和气温骤降），以响应社会各界的多方面需求。为了有益于公众，此类指数须根据地理和气候的差异进行标定。随着 PWS 产品变得更加具体和全面，NMHS 应考虑编制说明性材料，如图像、表、图形或图片，以便更为明确地将这些产品提供给用户。随着 IT 技术的不断发展，NMHS 必须要跟上快速的变化并抓住新的机遇。委员会强调，新趋势的关键是着重于将资料和信息的提供变为在信息和知识的应用框架内提供服务。

会员的优先重点领域

6.4.41 委员会认为，根据 WMO 战略计划，PWS 计划的主要领域应放在向会员提供最大帮助，以满足它们的要求来应对上述发展和变化的需求，以下为优先重点领域：

(a) *服务的提供* — 涉及优质服务、品牌形象、服务改进、用户需求、总体质量管理、不断的改进；

(b) *有效、及时的预警信息和传送* — 用易懂的语言和术语向公众提供 NMHS 产品，使之能够采取措施保护生命财产的安全。NMHS 产品的成功传送能够提高公信度，而且会更有机会得到公众积极的评价；

(c) *分发和播报* — 应利用一切机会对 NMHS 员工进行媒体技巧和播报技术的培训，因为预报、预警和信息的及时有效的分发和播报对于工作的可靠性十分重要，特别是在灾害天气期间。应该利用新技术带来的机遇，促进服务的提供并补充进更为传统的服务提供系统；

(d) *强有力的媒体关系* — 与媒体的重要伙伴关系对于 PWS 计划的成功极为重要。与媒体的合作及伙伴关系将有助于 NMHS 及时、准确地播发其官方信息，特别是在灾害天气期间；

(e) *公众教育和意识* — 了解天气知识的公众很有可能会对 NMHS 发出的预警作出积极的回应并采取相应的措施。NMHS 必须确保其“唯一官方声音”是公共预警及信息的权威机构，因此应采取切实的措施珍惜在其国家政策中的这种作用。。有必要提高公众对风险的意识和了解以及降低灾害风险方面存在的风险和脆弱性；

(f) *协调与合作* — 与所有需要天气服务，同时还能有助于服务提供的部门和机构（如媒体）的密切协调与合作十分重要。这将确保 NMHS 与灾害机构一起参与建立及检验有效的防灾计划、预警

系统、减灾战略和公共教育计划；

(g) *提高经济和社会福祉* — 易受天气影响的社会行业，如能源、卫生、运输和旅游，依靠公共天气服务来制定计划和开展业务。为帮助规划和开展项目，气候资料的可获取性尤为重要。在制定国家 PWS 计划时，NMHS 将通过这些行业代表的参与，并听取他们对产品设计和服务提供的可行性建议，从而为国家社会-经济的可持续发展作出直接的贡献。

未来的方向

6.4.42 考虑到趋势、发展以及会员的新需求，委员会要求未来的重点放在协助会员促进其国家公共天气服务计划，方法如下：

（a） 提供新技术和下列科学研究的应用指导（a）尤其是用于临近预报的数据采集和使用；（b）概率预报和信息；（c）多种灾害预警；(d)新产品的设计和传送；以及（d）服务的提供；

（b） 通过 PWS 各领域培训开展能力建设，使 NMHS 有更高的可信度，并出版通过 PWS 专家的工作确定的各主题的指导材料；

（c） 继续提供气象服务，特别是 PWS 的社会和经济领域的评估指导；

（d） 继续提供基于用户的服务评定和产品检验指南；

（e） 提供国际和区域天气信息交换的指南，适当包括季节预报的信息。

6.4.43 考虑到在当前议题下所作的讨论，委员会同意议题 11 下给出的 PWS 计划的未来工作计划。

6.5 业务信息服务 *（议题 6.5）*

6.5.1 委员会确认了对业务信息服务（OIS）的需求，用它提供有关 WWW 的业务信息，信息由 WMO 服务器负责提供和更新。

6.5.2 委员会强调业务信息服务（OIS）的总体效率取决于及时通报 NMHS 信息的变化和更新。注意到业务信息在完整性和更新方面存在问题，委员会提请：

(a) WMO 会员审议 WMO 出版物 No.9，A 卷-观测站，检查其所有的台站包括有关信息是否均已列入 A 卷，并根据需要向 WMO 秘书处提供新的信息；

(b) MTN 中心用 CBS-Ext.(98)统一的数据库程序维护 WMO 出版物 No.9，C1 卷-气象公报目录中涉及自己的部分；

(c) RTH 用 GTS 手册建议的格式提供日常目录，最好直接通过其网址，如果可能最好每月更新一次，但不得超过 3 个月；

(d) RTH 审议 C1 卷、日常目录和由秘书处准备的 SMM 监测结果间的比对结果，并根据需要更新涉及 自己的 C1 卷 及它们的日常目录；

(e) RTH 协调与自己联系的 NMS 对 C2 卷进行审议，并根据需要向 WMO 秘书处提供修改意见；

(f) WWW 中心负责质量监测，以便向秘书处提供有关它们网址的 URL 地址。

6.5.3 为帮助更新和使用业务信息，委员会同意对 OIS 做以下开发：

(a) 开发用于帮助和改进 A 卷更新的程序和工具；

(b) 将 C1 卷互动性在线获取扩大到 OIS 的其它部分；

(c) 增加对 XML 上信息的描述。

6.5.4 注意到可扩展标识语言（XML）在表示资料及诸如工作目录等元数据方面的潜力，委员会强调需要在 WMO 会员和秘书处当中加强并分享 XML 技术。

6.5.5 委员会高兴地注意到日本和瑞士愿意协助秘书处改进 A 卷。委员会同意提请其他会员考虑就 OIS 的开发对秘书处提供支持，旨在加快其发展。

6.6 系统支持活动，包括技术合作 *（议题 6.6）*

6.6.1 委员会回顾了 2005-2006 年期间通过 WMO 技术合作计划开展的有关 WWW 基本系统和公共天气服务的技术合作和系统支持活动。委员会同意下列关于技术合作支持优先重点划分的指导意见，但注意到顺利执行将很大程度上依赖于 CBS 确定的优先重点的调整，提出申请的 WMO 会员以及有关的认捐方。委员会注意到简化优先重点的重要性，要限制具有“最高”和“高”优先权的提议数量；这将有助于认捐方和受助国家更好的利用有限的资金，同时有助于集中精力调配资源。

综合观测系统（IOS）

6.6.2 委员会同意以下 IOS 优先重点的划分指导意见：

(a) 最高优先重点：旨在提高、恢复 RBSN/RBCN 现有的和建设新的高空观测能力的项目，重点放在重新启动不发报的高空站和改善资料稀少区域的覆盖率；

(b) 高优先重点：与提高 RBSN/RBCN 的资料质量、定时发报率和地面观测的覆盖率有关的项目，重点放在重新启动不发报的台站和改善资料稀少区域的覆盖率；

(c) 高优先重点：与引进和/或使用新的且有成本效益的观测设备和系统有关的项目，包括地基 AWS，AMDAR，ASAP 和漂移浮标；

(d) 中等优先重点：与改进/更新未被列入 RBSN/RBCN 台站一览表中的台站有关的项目。

信息系统和服务（ISS）

6.6.3 委员会同意下列关于 ISS 合作活动优先重点划分的指导意见：

(a) 最高优先重点：实施各 NMC 与 GTS 的连接，以便交换观测资料和加工的信息（最低速率 16Kbits/s，使用 TCP/IP 程序），包括接收基于卫星的资料分发系统；

(b) 最高优先重点：使用 TCP/IP 程序以最低 64Kbits/s 速率在各 RTH 之间进行资料交换；

(c) 最高优先重点： 完成 MTN 的改进项目；

(d) 最高优先重点：NMC 或具有类似功能的中心收集来自的 RBSN 台站的资料；

(e) 最高优先重点：有关能力建设设施的活动和使用国际互联网以及发展中国家运行相关设备，以便促进气象和相关信息的交换；

(f) 高优先重点：各 WWW 中心与 GTS 的备份连接；

(g) 高优先重点：通过因特网实施虚拟专用网络（VPN）连接，作为资料交换的备份，特别是针对 RTH 的资料交换。

(h) 高优先重点：向表驱动编码格式（TDCF）过渡。

6.6.4 WMO 为配备有气象卫星接收设备的会员设立的目标是 100%配备极轨卫星资料接收装置和静止卫星接收装置。通过在 WMO 若干区域使用先进分发方法（ADM），综合全球资料分发服务（IGDDS）概念为有效实现这些目标提供了新的技术可能性。委员会同意下列关于卫星资料接收系统优先重点划分的指导意见：

(a) 最高优先重点：如果 WMO 会员处于多用途电信卫星分发系统的覆盖区域内，，则要建立可提供空基观测资料和产品的多用途电信卫星接收系统（ADM）；

(b) 第二最高优先重点：为不在可提供卫星资料和产品的电信卫星分发系统（ADM）覆盖区域之内的会员以及没有任何直播接收装置的会员提供气象卫星直播接收装置，；

(c) 高优先重点：为不在 ADM 系统覆盖区域内的会员以及既没有静止卫星接收装置也没有极轨卫星接收装置的会员提供静止卫星或极轨卫星直播接收装置；

(d) 中等优先重点：为只有低分辨率直播接收装置以及不在任何 ADM 系统覆盖区域内的会员提供高分辨率卫星直播接收装置；

(e) 低优先重点：为处于某一 ADM 系统覆盖区域内的会员提供卫星直播接收装置。

资料加工和预报系统（DPFS）

6.6.5 委员会同意下列 DPFS 合作活动优先重点的划分指导：

（a） 最高优先重点：在 NMHS 获取来自先进中心的 NWP 产品，用以作为预报应用，尤其是灾害天气预报应用的指南；

（b） 最高优先重点：业务资料加工功能的自动化，包括观测资料的处理和 NWP 产品的后处理，以促进所有天气预报的应用，尤其是临近预报的应用；

（c） 高优先重点：NWP 产品的应用培训，特别是有关 EPS 产品的使用培训，和用于概率预报的产品应用培训；

（d） 高优先重点：业务资料加工培训，包括 NWP 产品后处理的实施培训和有限域模式的运行培训。

公共天气服务（PWS）

6.6.6 委员会同意下列 PWS 优先重点的划分指导意见：

（a） 最高优先重点：电视/媒体节目系统，包括高性能计算和通讯硬件、外围设备和软件、电视制作的视频设备以及相关的职工培训；

（b） 最高优先重点：基于计算机的气象工作站，通过预报员的互动，它能在卫星云图和已加工的产品（输入）基础上，为用户制作新的或增强的产品；

（c） 最高优先重点：提高 NMHS 的因特网接入能力，并将其作为种通信工具，以提高它们的资料获取，增加其公共天气服务的分发方法，并促进官方协调一致的信息的应用；

（d） 最高优先重点：与国家 PWS 计划有关的培训；包括媒体技巧（撰稿和节目制作）、产品设计、公众教育和认识方面的培训；

（e） 最高优先重点：用于分发公共天气服务的固定和移动通信系统，最好是现代化的电话和通信服务（如移动电话、寻呼机/短信息系统以及自动传真服务）；

（f） 中等优先重点：提供无线电广播的 VHF 电台和预警系统。

CBS 软件注册登记表

6.6.7 CBS 软件注册登记表为会员提供了有关软件包的信息，此类软件包是各会员通过 WMO 网络服务器主动提供的。委员会强调，世界天气监视网依靠计算机来开展其业务，委员会提请 WWW 中心考虑提供可在会员间免费交换的气象应用软件，并向秘书处提供要求在 WMO 网络服务器上更新 CBS 软件注册登记表中的信息。

6.6.8 委员会注意到发展中国家在购买软件包时遇到的困难，包括许可及其维护。委员会同意应在认捐国的报价中考虑到这一情况，尤其是开发通用“标准”软件包的可能性，例如用于自动气象站或可视系统的

软件包。

7. WMO 信息系统，包括 WIS 技术大会的报告 *(议题 7)*

7.1 委员会赞赏地注意到，一些 ISS 专家组将继续在 WIS 的未来发展中起到前瞻性的作用，并为 WMO 信息系统跨委员会协调组（ICG-WIS）做出重要的贡献。委员会回顾到，经过技术委员会主席联席会议（PTC）审议后，ICG-WIS 届会的成果将由 CBS 主席提交执行理事会。在确认 CBS 领导作用的同时，理事会重申 WIS 是为所有 WMO 计划服务的，并强调根据 WMO 各项计划的要求，它仍需做大量的工作，理事会还强调需通过共同努力保证 WIS 的成功发展和实施。

7.2 委员会满意地注意到，一些 NMS 在制定 WIS 的试点项目和原型方面付出了相当大的努力，特别值得关注的有以下一些项目：

- WMO 元数据核心规则版本和基准的实施；
- 作为 GISC 原型的六区协的 VGISC 项目 (埃克塞特、奥芬巴赫、图卢兹) ；
- DCPC 原型，包括与 VGISC 项目有关的 ECMWF 和 EUMETSAT DCPC 项目，还包括 SIMDAT 项目；
- 用于 JCOMM 相关资料的 DCPC 原型（世界资料中心，奥勃宁斯克）；
- NCAR DCPC 原型。

7.3 委员会注意到，EC 强调由于 WIS 是作为所有 WMO 计划的一个主要组成部分发展起来的，因而产生了对相应法规文件（如 WIS 手册）的需求，包括对 WIS 的准确定位及其在 WMO 总体基础设施中的功能，以及实施计划和实施的指南材料。委员会注意到，基于对组织、功能和业务设计的初步确认，应当分阶段开展规章文件的编写工作。委员会要求其 OPAG-ISS 与 ICG-WIS 协调，为这项任务做出贡献，但同时也强调任务的完成可能需要相当大的额外资金。委员会要求 OPAG-ISS 主席与 ICG-WIS 和 CBS 管理组合作，研究最有效的机制并为开展任务制订切合实际的计划安排，同时相应修改 ET-WISC 的工作计划。

7.4 关于 WIS 的实施，委员会强调 WIS 的实施应当分两个并行发展的阶段进行：

- WIS 实施阶段 A 应继续巩固和进一步改进用于高时效性资料和高业务性资料的 GTS，包括对其进行扩展，以满足世界天气监视网以外的 WMO 计划的业务需求（包括改进服务管理）；
- WIS 实施阶段 B 应通过为所有用户提供灵活的数据发现、调用和检索服务，以及灵活及时的传递服务，进一步拓展信息服务。

7.5 委员会确认，WMO 空间计划框架内的 WMO 综合全球资料分发服务（IGDDS）是 WIS 的组成部分，侧重于所有 WMO 计划所需的空基观测资料和产品的交换，它将在服务的及时提供方面为阶段 A 和阶段 B 做出实质性的重要贡献。

7.6 委员会同意，为了使发展中国家能参与 WIS，在这些国家中需要一个协调有效的能力建设计划，还同意，发展中国家的专家参加 WIS 的开发工作应考虑发展中国家 NMHS 参与 WIS 的实际能力、机遇和制约条件，这一点十分重要。委员会强调了提高 NMHS 及其他潜在用户团体对 WIS 服务认识的重要性，可采取的途径包括有发展中国家参与的示范项目。

7.7 委员会认识到在论证 WIS 的技术解决方案方面取得了不错的进展，但是它也关切地表示，在 WMO 团体能够实现 WIS 业务化之前仍有许多工作要做。委员会认同 EC-58 表示的关注，尽管一些会员已付出了相当大的努力，但是让 WIS 获得更充分的发展，尤为重要的是将其投入业务使用，总体上仍缺乏所需的财力和人力资源。委员会高兴地获悉，预计某个会员将提供一个借调专家，这使设立一个全职 WIS 项目管理人的工作取得良好进展，管理人对于通过与 ICG-WIS 的密切合作来协调 WIS 的实施可能有相当大的帮助。委员会注意到如果要该项目取得成功，WIS 的项目管理人员将需要一个强有力的、时间上尽可能全职的团队。委员会还对建立 WIS 信托基金表示满意，该基金将促进各会员与组织为 WIS 的发展和实施提供潜在的资金捐助；由 ICG-WIS 主席、OPAG-ISS 主席，以及来自参与当前重要项目的每个会员的一位专家（即澳大利亚、俄罗斯联邦、美国、法国或德国或英国、中国、日本）组成的指导委员会将为最佳地使用这些资金提供咨询，以促进 WIS 关键部分的技术发展和实施，委员会对此表示欢迎。

7.8 委员会注意到，考虑到全球信息系统中心（GISC）和资料收集或产品中心（DCPC）对 WIS 的功能十分重要，ICG-WIS 已提出有关指定这些中心的正式机制的建议。由于 WWW 基础设施的基本设计特征也适用于 WIS，建议的 GISC 和 DCPC 指定程序可类似于曾经成功应用于 WWW 计划中 RSMC 的指定程序。委员会完全赞同 ICG-WIS 的结论，并同意本报告附录 III 中所介绍的建议采用的程序。最终将把这些程序纳入与 WIS 有关的规范性文件之中。委员会注意到在中心功能的基础上指定 DCPC 还应当适当考虑到地理分布和相关的地区责任。

7.9 委员会敦促代表各参与计划的 WMO 技术委员会和其他机构提出对 WIS 服务的要求。对此，委员会强调，尽早明确 WMO 以外的用户团体尤其是在国际减灾管理团体中的潜在的 WIS 主要用户，是朝 WIS 适当考虑到它们的要求以便完全实现其目标并造福所有会员的重要一步。为此，委员会要求 WMO 的交叉计划尤其是 DPM 计划通过适当的协调机制牵头明确 WIS 的潜在用户并与它们进行磋商。在 2007 年中之前抓紧建立和实施协调机制，将跨学科的用户团体及诸如 ISDR、FAO 和 UNOCHA 等相关国际组织聚到一起，提出它们的要求并推动它们对 WIS 的参与和贡献。

7.10 委员会再次强调，基本 WIS 资料的交换和资料管理服务对于 GEOSS 将起到重要的作用，这是 WMO 对天气、水和气候资料与产品的重要贡献。

WIS 技术大会

7.11 委员会对在委员会特别届会前在首尔（2006 年 11 月 6—8 日）召开 WIS 技术大会（TECO-WIS）表示满意。TECO-WIS 的计划包括 GISC 和 DCPC 原型的实际示范，预期不久的将来它们将进入准业务实施。TECO-WIS 回顾了元数据的开发、信息和通信技术的基本组成部件和试验及原型项目。TECO-WIS 的计划还包括了各利益攸关方的介绍，其中包括 CAS、CAgM 以及 WMONDPM 计划，以及信息与通信技术(ICT)产业部门的介绍。.TECO-WIS 为向 WMO 的所有计划和会员说明预计通过 WIS 提供的新服务可获得的好处做出了重要贡献。TECO-WIS 赞赏地注意到, 通过越来越多的 NMHS 的积极参与和努力以及包括 THORPEX、IPY 和 JCOMM 在内的一些 WMO 计划和技术委员会的参与和贡献，WIS 的开发取得了重大

进展。

7.12 TECO-WIS满意地注意到，WIS中心的功能及数据通信服务的基本组件都是基于现有的技术和行业标准，这将有助于有成本效益地实施。通过一些试点和原型项目已对不同功能要素的支持技术进行了评价。TECO-WIS十分赞赏地注意到在V-GISC项目（含SIMDAT项目）开发上所取得的进展，这是通过一个示范项目取得的，该示范项目目前支持从一些NMS和国际中心，包括德国气象局、法国气象局、英国气象局、ECMWF、EUMETSAT、NCAR和NODC，发现和检索横跨WMO不同计划的资料集和相关的元数据。会议还对将目前存在于WWW手册和业务信息中内含的元数据转变成标准元数据的工作感到高兴，同时也对开发能从其他计划（如JCOMM和CAS）收集元数据的工具以使用户能够有效地发现和获取资料的工作感到高兴。

7.13 委员会审议了技术会议的结论，批准了以下结论并提出了行动建议：

(a) 元数据是 NMHS 将要实施的一个新概念。NMHS 目前迫切需要关于元数据制作和交换（尤其是在 GTS 上）的规范、程序和准则的建议。委员会特别强调了 NMHS 对通用的业务元数据编辑工具的需要，以方便实施，同时还强调了相关的能力建设活动，尤其是培训；

(b) 应继续推动目前 CBS 在核心元数据标准和业务目录方面的进展,包括与资料定义、表示、存取和传输有关的其他方面。会议强调了遵守行业标准即 ISO 191xx 系列的重要性以及 WMO 对制订这些标准的贡献，以确保 WMO 团体内部 WIS 的 WMO 各项计划的资料和产品与其他相关团体的信息系统具有互通性。TECO-2006 因此强调需要加强 WMO 在 ISO 191xx 系列方面的专业知识，并要求秘书长让秘书处通过适当的办法更多地参与和投入到 ISO 的相关重要活动中；它还建议 WMO 加入联合国地理信息工作组；

(c) 根据最新的相关活动和发展，首先是 GEOSS 和 GEO-NETCast，审议和更新 WIS 的发展和实施计划；为此与 GEO 的积极合作很重要；

(d) 为了规划和推动 WIS 组件的实际运行，急需编制合适的规范性文件（例如 WIS 手册），内容包括实施所需的组织过程、推荐性规范和程序以及指导材料。尤其要强调的是急需 GISC 界面的技术规范，包括 WIS 组件的统一用户界面，以及需要 WIS 指南以阐明国家中心在 WIS 开发和服务中的贡献、参与和收益。它要求秘书长明确相应的资源，为加速这些对 WIS 的实施至关重要的发展向 CBS 各小组和 ICG-WIS 提供支持；

(e) 所有 NMHS 参与 WIS 的开发是确保所有 WMO 计划得以成功实施以及共同拥有该系统的重要因素。WIS 的一个重要目标就是方便发展中国家和 LDC 的 NMHS 以有成本效益的方式获取和接收 WMO 计划的资料和产品。在此方面，要着重强调是需要向 WMO 团体及其他团体开展宣传活动，提高它们对 WIS 发展和服务的认识；同时需要更加努力地为发展中国家快速实施一项宣传计划，使它们在开发 WIS 和有效利用 WIS 方面给予合作；该计划应当包含一些相应的行动计划，这些行动计划应通过区协的相关机制进行协调。会议赞赏地注意到由秘书长发起的关于加强 WIS 开发和实施的交叉活动；

(f) 注意到不同 WIS 用户团体和目标用户群的需求，例如技术专家和决策人员的需求，应当通过适当的渠道公布 WIS 的有关信息，包括其价值和效益，对已实施的试点项目的实际参与和它们之间的互动；

(g) 一些技术上的挑战仍需进一步研究，包括及时对不同 GISC 之间的资料和元数据进行同步、提供与其他系统和应用的界面以实现所期望的互通性、统一方案和规范以确保 WIS 服务的安全、认证和授权。会议还强调，把已经在原型中经过测试的技术、程序和应用纳入到业务实施中将需要付出更多大量的努力；

(h) 除了法国、德国和英国建立的欧洲全球虚拟信息系统中心（VGISC）以外（ECWFW 和 EUMETSAT 是其积极的合作伙伴），会议赞赏地注意到 WMC/RTH 墨尔本、莫斯科和华盛顿及 CMA、JMA 和 KMA 都正在开始为实现 WIS 中心的功能和服务制定计划。会议认识到启动至少一个 GISC 中心和若干个 DCPC 中心业务的比较现实的目标时间是 2008 年中期。

8. WMO 空间计划 *（议题 8）*

8.1 委员会审议了 WMO 空间计划在以下方面的主要活动：WMO 各项计划提出的空基观测要求，改进空基 GOS，加强资料和产品的存取以及提高会员使用这些资料的能力。

8.2 委员会回顾到，在综合观测系统部分已报告了全球观测系统（GOS）空基部分的现状（议题 6.1）。委员会高兴地注意到，自上次 CBS 会议以来，随着许多静止卫星的发射，如 MTSAT-1R、MTSAT-2、Meteosat-9、GOES-13 以及即将升空的位于东经 86.5 度的 FY－2D 卫星，GOS 空基部分得到拓展。关于极轨卫星，委员会注意到 NOAA－18 的发射，具有先进负载的 Metop-A 的发射，中国将在 2007 年 9 月发射 FY－3A 卫星的计划和俄罗斯联邦将在 2007 年 12 月发射 METEOR 3-M 一号卫星的计划。一些新研发卫星的发射也会对 GOS 做出贡献，如 ALOS、Cloudsat 和 Calipso 以及 Resurs-DK。还可以获得来自 COSMIC 星群的无线电掩星探测资料。此外，委员会还注意到，通过提供来自不久将发射的海洋卫星 HY－1B、中国-巴西 CBERS 系列及将于 2007/2008 年发射的 HJ 环境和灾害监测星群 HJ-1（－A、－B、－C）的遥感资料，中国国家航天局（CNSA）已确认愿为 WMO GOS 空基部分做出贡献的意向。HJ-1 带有红外高光谱仪器，对于同其他卫星系统的仪器进行相互校准具有很高的潜在价值。

8.3 委员会还注意到 NOAA 将 GOES-10 向移至西经 60 度，以扩大对美洲的覆盖率。通过有效地促进卫星对强风暴、洪水、干旱、山体滑坡和野火等自然灾害的探测，此次推移将有助于保护北美、中美和南美及加勒比海地区的生命和财产安全。GOES-10 在其新位置开始业务运行后，将能够每 15 分钟提供一次图像资料。委员会注意到，随着 GOES-10 的推移及其在南美洲上时间分辨率的提高，GOS 空基部分现已能够满足 WMO 所有全球需求。委员会还欢迎 EUMETSAT 作出的决定，即把 Meteosat-7 卫星重新定位以继续完成印度洋资料覆盖的任务，直至 2008 年，同时还继续提供 DCP 服务，以便支持印度洋海啸警报系统。委员会注意到对印度洋进行持续和强有力覆盖的需求，同时也对俄罗斯和中国在相当长的期间里对这种需求作出的响应感到满意。

8.4 委员会对旨在确保不同卫星观测的可比性而实施的全球空基相互校正系统（GSICS）表示欢迎，这对于 NWP 和气候变化探测充分受益于卫星观测是很重要。委员会注意到中国，EUMETSAT、日本、俄罗斯联邦和美国正在参与 GSICS，韩国正在准备参加。

8.5 委员会注意到在实施“全球观测系统演变实施计划”中与卫星有关的的建议方面所取得的进展。委员会欢迎采取行动，开始更新至 2025 年的 GOS 远景目标。委员会进一步注意到对 GCOS 需求的评估结果，它强调称有些基本气候变量（ECV）目前只有研发卫星在观测，且没有没有长期提供的计划。委员会高兴地注意到，对 GOS 基准的更新将会努力将此类变量的持续观测纳入进来。

8.6 委员会肯定了 IGDDS 项目在 WIS 计划内的重要性，它确保及时获取卫星资料和产品。委员会赞赏地注意到，EUMETCAST 将其 EUMETCAST 业务系统扩展到一区域、二区域的西南部、三区域和四区域，中国成功演示了 FengyungCast 并计划将该服务向亚太地区的所有国家开放。委员会还注意到俄罗斯的基于“MITRA”技术的“Meteoinform”DVB/S 系统对 IGDDS 的潜在贡献。委员会欢迎启动亚太地区 ATOVS 转发服务（RARS）。这种服务目前已在 GTS 上提供包括南极 Syowa 站在内的 10 个 HRPT 站的 1c 层 AAPP 格式的 ATOVS 资料。委员会鼓励要努力完成全球 RARS 网，因为它对于 NWP 十分有用。

8.7 委员会肯定了虚拟实验室和优秀中心（COE）的重要性，并鼓励它们不断发展。委员会鼓励每个 COE 在本区域内建立一个常设联络组，以支持信息交流和继续教育。

8.8 委员会高兴地注意到高端培训活动（HPTE）取得的巨大成功，它为来自 120 多个 WMO 会员的 1000 多个用户提供了在线培训，这表明了远程教学的有效性。委员会鼓励 WMO 空间计划在区域级别上对这些活动继续采用这种方法，如卫星在气候研究中的应用。

8.9 鉴于在实现 WMO 2004-2007 年空间计划实施方案所设定的目标方面取得的进展，委员会同意大部分旨在使 WMO 会员直接受益的目标已经实现。委员会鼓励所有利益攸关方继续不断地努力，以实现所有的目标。

9. 其它交叉活动

9.1 地球观测组 *（议题 9.1）*

9.1.1 委员会注意到 WMO 执行理事会通过的决议（决议 15（EC-58）），重申了其对 GEO 的承诺，并认为 WMO 决议 40（Cg-12）确定的所有基本资料都应通过 GEOSS 的可互相操作的安排予以提供，以满足全球各界的需要。委员会还注意到 WMO 广泛参与了 GEO/GEOSS 工作。委员会对两位 GEO 报告员和参与 CBS GEOSS 相关事务专家会议的人员表示感谢，此次会议围绕 GEOSS 进行了讨论，并向 GEO 秘书处提供了有关 2006 年 GEO 工作计划第一版的具体意见。

9.1.2 委员会强烈认为 WWW 组件应该成为 GEOSS 综合系统的核心。同时，委员会坚信 WMO 会员大量的经验和技术对 GEO 建立 GEOSS 有很大的帮助。委员会注意到 GEO 有 9 个社会效益领域（SBA），并且预期 WMO 将在 SBA 关于天气、水、气候和水文气象灾害方面发挥主要作用并承担主要职责。在这样做时，NMHS 的权限不会受到 GEO 的侵占。委员会回忆起 GEOSS 注重于观测和将数据转化为信息，但不包括提供决策产品，例如预警和警报。

9.1.3 关于 GEO-NETCast，委员会注意到目前它由 EUMETCast 和 Fengyuncast 组成，并主要提供气象卫星资料和产品供 WMO 会员使用。委员会还注意到，当为了满足 WMO 会员需求以外的外部 SBA 需求而扩展 GEO-NETCast 时，GEO 综合信息系统就需要提供与 WWW 内部现有的数据管理功能相当的功能。因此，委员会强烈认为 2007-2009 年的 GEO 工作计划应利用 WMO 作出的关于将 WIS 成为 GEO 综合信息系统核心组件的承诺。此外，委员会重申以前的承诺，愿意让 GEO 参与 WIS 计划，尤其是参与 WIS 在 2007 年及以后期间的实施。

9.1.4 委员会还同意语言支持是 GEO 急需解决的问题。委员会回忆起它用 4 种语言公布其参考文献。如果 GEO 的文件或 GEO 的官方语言仅仅是英语，这将成为 GEOSS 一个重大且毫无必要的妨碍。

9.1.5 委员会同意 GEOSS 理念的实施将对 WMO 的会员非常重要。它将成为 WMO 资料和产品为绝大多数社会效益方面（SBA）提供支持的途径。它将让人们更多地认识到 NMHS 在满足社会需求方面的价值，并使 WMO 能够参与这一重大举措。通过将 WWW 组件系统设置为综合系统的核心，新增的能力，例如期望从 WIS 中可获取的能力，将使所有人受益。因此，委员会敦促秘书长及所有 GEO 成员，同时也是 WMO 会员，在 GEO 论坛中强调充分采用 WMO 的系统作为 GEOSS 组件的必要性。

9.1.6 委员会要求两位 GEO 报告员继续与 WMO 秘书处以及各会员合作，为 WMO 参与 GEO 提供咨询意见。

9.2 防灾减灾 *(议题 9.2)*

本委员会对 DPM 计划可发挥的作用

9.2.1 委员会回顾了 WWW 基本系统在为 WMO DPM 计划目标做贡献方面所发挥的关键作用。委员会进一步认识到这些业务系统是由 GOS 地基和空基部分、WIS/GTS、GDPFS 和 PWS 服务提供等方面组成的，该系统所提供的基础内容支持 NMHS 履行其最终职责的努力，即为生命和财产安全提供服务保障。

9.2.2 委员会还注意到 NMHS 的贡献包含了灾害风险管理的方方面面，包括国家层面的风险鉴定，风险减少和风险转移活动，包括：

- 参加国家灾害风险管理计划；
- 提供灾害数据库和分析；
- 提供业务灾害预测和预警；
- 提供气象服务，以支持灾前灾后的应急响应和救灾行动；
- 加强 NMHS 的产品和服务，并通过与其它机构的合作将其运用于决策过程之中；
- 各 NMHS 及他们关键利益攸关方，如部长，灾害风险管理者，权威人士，应急响应人员，媒体的教育与培训计划和方式；

- 公共宣传计划和素材。

委员会强调，要认可 NMHS 与其它国家机构合作以确保 NMHS 在国家灾害管理中的价值，既要加强国家计划、筹备、应急响应和恢复，同时还要加强各 NMHS 在这些过程中的作用。

9.2.3 委员会还注意到各 OPAG 的大量工作与 DPM 计划的目标相关，并为此做出宝贵的贡献。但是，就大部分而言，其活动的内容更为广泛。委员会可以为这一重要项目发挥作用的活动包括：

(a) 全球观测系统的不断发展是为了提供一个持久的观测基础，旨在探测和监测极端天气事件，并为满足新的观测需求奠定基础（OPAG-IOS）；

(b) 对资料加工和预报系统的开发和实施进行协调，这些系统是保障 NMHS 天气预报业务的，也是支持在 GDPFS 内设立专业数值预报系统的基础，这是减轻各种气象灾害的需要（OPAG –DPFS）；

(c) 加强 GTS，确保资料、产品、预报和警报能有效地分发给各 NMHS，帮助其向其所在社会提供 DPM 服务（OPAG-ISS）；

(d) 加强 NMHS 对公众天气服务的提供，做到优化设计，广泛沟通，解决与气象和水文服务有关的社会、经济问题（OPAG-PWS）。

9.2.4 委员会特别注意到 OPAG 还从事了一些有针对性的活动，具体开展的目的是协助 NMHS 开展其减灾防灾活动。这些包括，例如：

(a) 灾害性天气预报示范项目，旨在改进灾害性天气预报服务，帮助那些目前尚未使用 NWP 模式输出的国家（OPAG-DPFS）；

(b) 紧急响应活动计划包括开发并维持各种业务安排以便应用大气消散模拟工具和有关核和非核紧急事件的专业知识，例如火山爆发、沙尘暴、野地火灾、化学和生物事件和其他灾害（OPAG-DPFS）；

(c) 协助发展中国家的 NMHS 开展降低风险的活动，诸如通过举办有关临近预报进展及在气象和水文灾害预警中的应用的培训班（OPAG-PWS）；

(d) 实施卫星实时收集海啸浮标资料（OPAG-ISS）；

(e) 通过广泛实施和利用 WIS/GTS，加强 NMHS 在各国 DRR 战略中的作用 （OPAG-ISS）（参见第 7.9 段议题 7）。

本委员会在防灾减灾活动方面的进展

9.2.5 委员会注意到其 DPM 协调员和 DPM 计划办公室之间的互动关系，该计划办公室旨在负责处理与本委员会交叉的各项活动和实现 DPM 计划的各项目标，委员会鼓励他们继续确定本委员会和 DPM 计划能够相互支持的领域，包括通过加强后的有关 WWW、WMO 空间计划和 PWS 的业务。委员会注意到 DPM

计划办公室正在进行的关于国家层面和技术委员会的各类调查，这将反映上述互动的信息。

9.2.6 委员会欢迎这个机遇，以便把增强的对 DPM 计划需求的响应融入其工作计划之中，与此同时要求 DPM 计划将本委员会的有关需求体现在 DPM 计划的规划活动中。为此，委员会要求 DPM 计划办公室向每个 OPAG 和有关专家组就它们可以协助解决的具体需求予以报告。委员会注意到各 OPAG 将继续定期评估其活动对 DPM 和其他交叉性计划的支持力度，并注意到它们将就其成果作出相应的报告。

9.2.7 委员会肯定了多灾害途径对 DPM 的效益，并注意到 WWW 计划和 PWS 计划已在其基本观测、通讯、资料加工和预报及服务提供等业务系统中体现出了一种多灾害防御途径。委员会强调有必要继续加强这些基本系统及服务，并确保其业务持续可靠，同时辅以具有针对性的、更加具体化的灾害的内容，以满足具体的需求。

9.2.8 委员会认为 DPM 计划中许多目标的实现将需要一种跨委员会的协作途径，并要求其 DPM 协调员寻求各种机遇，与其他委员会的协调员一道共同努力，诸如 CIMO 和 JCOMM，共同研究解决有关的问题，包括制订针对所有有关灾害类型和所有灾害体系的标准化资料和报告格式。

9.2.9 委员会注意到 DPM 计划拟于 2006 年年底举行一次技术委员会 DPM 协调员会议，进一步探索交叉性计划的合作机遇。此次协调会议的结果将提交给定于 2007 年 1 月底举行的 EC DPM 咨询组第二次会议，届时将邀请各技术委员会主席讨论配合 WMO DPM 计划的（跨）委员会活动。拟讨论的问题包括编写有关灾害资料产品、方法、灾害特征和绘图的统计分析指南，这与各 OPAG 中若干专家组的工作相关。委员会要求其 DPM 协调员与 DPM 计划办公室密切配合，确定与本委员会有关的关键领域，并要求其专家组审议这些要求。

9.3 质量管理框架 *(议题* 9.3)

9.3.1 委员会注意到执行理事会（EC）有关以下内容的一些决定：制定 WMO 质量管理框架（QMF）、NMHS 引进质量管理系统（QMS）、建立同国际标准化组织（ISO）的合作、各技术委员会修订质量管理（QM）文件，以及有关 QM 术语的一致性。

9.3.2 根据执行理事会的决定，委员会决定要求每个 OPAG 对它们出版物中论及质量问题（特别是质量管理、质量控制和质量保证）的部分进行审查，以保证其中使用的术语和“ISO 9000：2005 标准”中与质量有关的术语的定义相一致，并在必要时制定 QA/QC 程序；委员会要求其 QMF 报告员对修改的文本进行审查，以保证文本在 OPAG 之间以及与其他委员会出版物的一致性。委员会注意到报告员关于优先审议以下作为 WMO 技术规则附录的《全球观测系统手册》以及《全球电信系统手册》的建议。关于《电码手册》，委员会注意到其中包括描述数据表示的程序以及观测和观测解释的程序。委员会要求 OPAG-ISS 和 OPAG-IOS 确保用单独的文件来描述观测和观测解释的程序。委员会要求 OPAG 和管理组合作解决审议所必须的资金。

9.3.3 委员会注意到，在质量管理系统中需要对文件的修改情况进行适当的管理，以保证能使用那些最新版本的文件。为了帮助会员履行职责，也为了保证尽可能最广泛地获取并执行 CBS 有效的技术指南文件，委员会要求秘书处确保 WMO 网站提供的 CBS 技术文件、指南和手册是最新的版本（如果有的话，也包括最新的补遗），并清晰地标明最新版本和补遗的出版日期及编号。

9.3.4 委员会注意到执行理事会提出的建议，即最好通过 VCP 计划来解决能力建设活动，这可以解决发展中国家的 QMS 实施问题，包括将“实施质量管理系统”作为高度优先领域并促进伙伴关系和合作而不是通过示范项目来实现。

9.3.5 考虑到目前国际民用航空的发展，委员会注意到，对于为国际空中导航提供气象服务的一些 NMHS 来说，在未来若干年内 QMS 必须以 ISO 9000 系列作为标准将成为可能。

9.3.6 委员会同意了 QMF 报告员的职责（TOR）（见议题 11）

9.4 THORPEX *(议题 9.4)*

9.4.1 委员会审议了 THORPEX 在实施方面所取得的进展。

9.4.2 委员会赞赏地注意到 THORPEX 活动报告突出介绍了自从 2002 年开始以来 THORPEX 所取得的进展。委员会还对许多科学家表示感谢，他们已经并仍在为本计划目前的成功贡献着才智，并特别提到加拿大、中国、日本、法国、挪威、美国和英国，这些国家不断地提供资助，中国还向 IPO 派遣了专家。委员会赞赏韩国在 2006 年期间为 THORPEX 信托基金出资的计划。

9.4.3 委员会注意到预算问题十分紧迫，并敦促更多会员向信托基金提供支持。

9.4.4 委员会还注意到第五十七次执行理事会届会的意见：提请注意大多数 WMO 计划在 THORPEX 中所起的明确作用，即交叉性活动和开发性合作，并注意到执行理事会第五十六次届会上提出的建议已得到遵循，例如 CBS 向所有 OPAG 提供全面的支持，其副主席和管理组负责协调，并指定专家参加 THORPEX，反之亦然。

9.4.5 委员会特别高兴的是在 THORPEX 交互式全球大集合（TIGGE）的开发方面取得了进展，这是一个用于多模式集合预报系统的原型，将指导全球交互式预报系统（GIFS）的开发。在第一阶段，TIGGE 会做到让所有 WMO 会员近实时地调用集合预报产品，用于科研目的。注意到将在 WMO 信息系统（WIS）框架下处理获取数据的要求。委员会重申，大体上说，在 THORPEX 的框架内，将开展区域性和全球性项目和试验，目的是：

(a) 通过提高认识，了解全球性因素至区域性因素对天气系统的生成、演变和可预测性的影响，从而提高预报水平；

(b) 针对卫星观测和实地观测的目标来设计交互式预报和观测的战略，从而为 WMO 全球观测系统（GOS）的发展做出贡献，GOS 是全球综合地球观测系统（GEOSS）的核心部分；

(c) 创建和评估系统，对卫星和实地测量的目标观测进行同化；

(d) 加速提高数值天气预报、概率预报的精度，加速改进对初始条件不确定性的描述；

(e) 测试并示范全球多国多模式多分析集合预报系统的效力；

(f) 示展通过提高预报水平带来的社会效益和经济效益，其中有对决策支持工具的改进，有利用先进的预报产品让社会、经济领域直接受益等方面。

9.4.6 委员会注意到以上的研究活动具有强烈影响 WWW 功能的潜力。它要求管理组考虑 THORPEX 研究对未来工作计划的执行可能产生的影响，并保持与 THORPEX 的对话，以确保通过该计划实施的研究活动将最大限度的有利于 WWW 的运行。

9.4.7 委员会注意到二区协、四区协和六区协在区域范围所开展的 THORPEX 方面的组织工作，包括各区域协会提名了 WWRP/THORPEX 报告员，还注意到在一区协启动与健康和农业有关的示范项目方面所做的努力。委员会高兴地注意到 THORPEX 伙伴关系计划在南半球得到迅速发展，该计划由澳大利亚和南非牵头，得到新西兰、智利、巴西和库克群岛的积极参与。该计划将包括一区协、三区协和五区协的国家。委员会注意到 THORPEX 把重点放在为 WMO 会员带来社会和经济效益上所具有的重要意义，并注意到现在正在开展活动，以展现通过提高预报水平可给用户带来的实用性。

9.4.8 委员会感到高兴的是：

(a) THORPEX 和 AMMA 之间开展合作，最近成功地达成了漂浮探测仪项目，将对东风波进行监测；

(b) THORPEX 参与 GEO 的工作计划；

(c) 制订 THORPEX IPY 的活动。

9.4.9 委员会满意的注意到，W.Zwieflhofer 先生（ECMWF）被任命为 CBS 提名的 THORPEX 技术咨询委员会（TAB）联合主席；施培量先生（OPAG-ISS 主席）被任命为 THORPEX 资料政策和管理（DPM）工作组主席；J.Purdom 先生（OPAG-IOS 主席）被任命为 THORPEX 观测系统工作组联合主席。这些任命确保相应的 CBS 专家意见得以提出，并有利于 THORPEX 的成功规划和执行。委员会同时注意到 PWS OPAG 和 THORPEX 的社会经济研究应用（SERA）工作组之间已经形成的紧密工作联系。

9.5 国际极地年 *（议题 9.5）*

9.5.1 委员会满意地注意到 WMO/ICSU 国际极地年联合委员会（JC）为筹备 2007-2008 国际极地年所取得的实质性进展。委员会高兴地注意到 JC 在第二次会议（2005 年 12 月，日内瓦）对各技术委员会参与制定和实施 IPY 计划表示欢迎，尤其是在观测资料和产品、资料管理和信息服务方面。

9.5.2 委员会认识到大部分由 JC 批准的 IPY 项目均与 WMO 项目密切相关，还认识到许多 NMHS 在编制超过半数的 IPY 项目建议书方面发挥了积极的作用，并有 52 个国家计划参与这些项目的实施。委员会注意到，鉴于 NMHS 和各技术委员会在 IPY 中的作用，EC-58（2006 年 6 月）得出了以下结论：在实施 IPY 计划期间，当将利用现有的隶属于各 NMHS 和各技术委员会责任范围的全球观测系统各部分时，以及在 IPY 之后当需要确保继续沿用在 IPY 期间经过改进或新建的各类观测系统时，上述 NMHS 和技术委员会将会发挥重要作用。委员会强调应告知会员与 IPY 有关的观测系统的改进。为此，委员会建议除了 IPY 的网页（http://www.ipy.org）之外，应该广泛利用 CBS 的新闻简报。委员会得到建议，可能的话应该向其他领域拓展 IPY，以研究像乞力马扎罗山和肯尼亚山的雪盖等独特现象。

9.5.3 委员会坚决赞同 IPY 的资料交换政策，该政策与之前 WMO 大会通过的决议一致。委员会强烈鼓励所有的 IPY 项目在 GTS 上实时交换观测资料，以支持 WMO 会员的活动。

9.5.4 委员会认为，在进一步筹备 IPY 过程中，最为理想的是要确保 IPY 项目协调员在必要时提交有关卫星资料和产品需求，以及通过世界气象组织信息系统（WIS）交换 IPY 资料和信息的需求，必须作为当务之急，优先提出上述需求，并提供给 CBS 用于规划。对此，委员会强调有必要在以 JC 观测分委会和资料管理政策分委会为一方与 CBS IOS OPAG 和 ISS OPAG 为另一方之间就共同关心的问题进行密切的沟通。

10. 有关本委员会的长期计划 *（议题 10）*

监督和评估 WMO 第六个长期计划(6LTP)的执行

10.1 委员会要求管理组确保要求 CBS 提供的有关评估过程的材料，尤其是有关实现九个 WMO 战略的情况。

制定 WMO 战略计划 2008-2011

10.2 委员会注意到执行理事会关于制定 WMO 战略计划 2008-2011 和 WMO 的操作计划的决定。委员会要求管理组确保要求 CBS 提供的有关制定这些计划的材料。

10.3 委员会要求：秘书处在准备对 WMO 计划做贡献以确保 CBS 的规划以及 WWW 和 PWS 计划时，目标要具体、可以衡量、可以实现、有的放矢并有时间要求。

10.4 委员会注意到，WMO 计划覆盖面很广，如要取得成就，需要经常调整。因此，要求其管理组不要确保技术产出，而且要确保有关资金，这是取得成就所必须的。委员会要求秘书处为该管理组提供取得这些成就所必需的财政信息。

11. 未来工作计划 *（议题 11）*

11.1 委员会审议了第 13 次届会以来取得的进展，并在考虑到执行理事会有关决定和本次届会讨论的基础上，尤其是在议题 6 的讨论基础上，审议了未来 2 年的工作计划。

11.2 委员会审议并根据需要通过了 CBS-13 建立的各 OPAG 下设的小组和报告员的职责和任务。本报告附录 IV 列出了为补充或调整目前各小组和报告员的职责所确定的具体任务或经修改后的职责。委员会要求各 OPAG 组长确保这些具体任务得以全面完成。它进一步要求管理组不断审议工作计划，并根据 OPAG 组长的建议视情作好安排。

11.3 注意到执行理事会有关对技术委员会和区域协会工作积极性问题的的决定，委员会要求管理组针对如何选用各国的专家承担各 OPAG 下设报告员和小组成员的工作提出改进建议，包括如何认可这些专家所做的有价值的工作。委员会还要求管理组分析报告员和各小组的工作，从中找出今后值得关注的领域。

11.4 OPAG 专家组的工作计划应清楚地说明其职责、建议的时间范围及成果并指明为实现它们所需的资源和专业知识。注意到所有 OPAG 在为其活动获取专业知识和保障时碰到越来越多的困难，委员会建议为 CBS 专家组建立一个信托基金。

妇女参加本委员会的工作

11.5 委员会注意到 WMO 第二次气象水文领域妇女大会（2003 年 3 月，日内瓦）的各项建议和第 14 次世界气象大会（Cg-14）的决议 33（Cg-15），上述建议和决议要求妇女拥有参与气象水文工作的平等机会，并注意到委员会过去为加强妇女参与本委员会的工作所付出的努力。认识到需要在延续的基础上采取一些新的举措以便对这些努力加以调整和加强，委员会通过了决议 1 (CBS-Ext.(06)，并指定 Vicki Nadolski 女士（美国）为 CBS 关于男女平等问题的联络员。本报告附录 IV 给出了男女平等问题联络员的职责。

12. 审议委员会以往的决议和建议以及执行理事会的有关决议 *(议题 12)*

按照惯例，委员会审查了本次届会前通过且仍然有效的决议和建议，并通过了决议 2（CBS-Ext.(06)）和建议 9（CBS-Ext.(06)）。

13. 其它事宜 *(议题 13)*

13.1 委员会注意到，随着新的计划和倡议（如 WIS 和 GEOSS）的规划和实施，在收集、分发和使用数据和产品方面发生了很大的变化，并能从新的信息和通信技术中受益。委员会提请 CBS 管理组审议这个问题并要求主席采取合适的行动，以确保继续重视资料政策的潜在影响，包括在下次技术委员会主席会议期间讨论资料和产品的国际交换事宜，并视情向执行理事会咨询组进行报告。

13.2 一些会员强调公共天气服务计划是一项交叉活动，它需要和若干个 WMO 计划和技术委员会合作。由于其他技术委员会（例如：CAS、CCl）的参与及对它们的影响，委员会注意到在公共天气服务计划目前的结构内，一些问题不能容易地和完全地解决，例如季节性天气预报的影响。委员会提请 CBS 管理组审议这个问题并请其主席采取合适的行动解决这个问题，包括在下次技术委员会主席会议期间，向执行理事会有关 NMHS 和 WMO 发展的工作组适时提出和报告这个问题。

14. 第十四次届会的时间和地点 *(议题 14)*

由于出席本次届会的会员没有提出正式邀请，所以委员会决定在晚些时候确定第 14 次届会的时间和地点，并要求主席与秘书长协商以作出必要的安排。

15. 会议闭幕*(议题 15)*

15.1 本委员会主席 A. Gusev 先生在闭幕式讲话中回顾了本次届会所取得的主要成果。他回顾了 NMHS 在过去几十年中发生的巨大变化，并认为目前 NMHS 正处在新技术变革的前夜，这就再次要求委员会广泛地参与以寻求应对挑战的解决方案。他强调 CBS 在支持众多跨学科活动及提供基本系统方面承担重大的责任，这对其它计划开展工作至关重要。他指出 NMHS 在当今世界中作用的不断演变，这为保护生命财产，提供与可持续发展、气候变化影响和水文安全有关的资料做出了重要的贡献。因此，目前 NMHS

已成为一个经济因素。他呼吁会员吸引年轻专家，并要求让更多的专家参与专家组的工作。最后，他认为本委员会需要承担的一项战略任务是提高人们对世界天气监视网及其使命和成就的认识。在结束语中，他感谢 OPAG 的工作；感谢管理组、报告员以及为本委员会工作做出积极贡献的全体人士；感谢 WMO 秘书处的坚定支持；感谢翻译人员以及当地工作人员的出色安排。

15.2 韩国气象厅（KMA）预报局局长 Kwang-Joon Park 先生表示 KMA 很高兴能承办本次 CBS 特别届会。他对本次会议的讨论和各个议题所取得的成就表示赞赏。他表示 KMA 将尽可能继续支持 CBS 的工作。

15.3 J. Hayes 先生代表 WMO 秘书长 M. Jarraud 在会议上致辞。他衷心感谢韩国政府和韩国气象厅的热情款待；感谢为本次届会所作的出色安排以及全体代表所提出的真知灼见。他总结了本委员会在今后将面临的重大挑战，并强调要与其它计划和委员会加强合作，以确保开展有效的工作。他欢迎本次届会取得的成功，并赞赏本委员会在兼顾全体会员需求和能力的基础上继续以合作的精神开展工作。最后，他感谢提供支持的 WMO 全体工作人员，他们使本次届会得以成功举行。

15.4 本次基本系统委员会特别届会于 2006 年 11 月 16 日 10:40 闭幕。

决　　议

决议 1 (CBS-Ext.(06))

妇女参加委员会的工作

基本系统委员会，

注意到：

(1)　联合国妇女大会（1995 年，北京）并认识到妇女的重要性和妇女对科学的贡献，

(2)　《21 世纪议程：可持续发展行动计划》（1992 年 6 月，里约热内卢）第 24 章呼吁：为实现可持续和平等的发展全球妇女行动，

(3)　WMO 第二次气象水文领域妇女大会（2003 年 3 月，日内瓦）的报告，

(4)　第 14 次世界气象大会（Cg-14）决议 33，该决议呼吁妇女拥有参与气象水文工作的平等机会，

考虑到：

(1)　需要在无需考虑性别的基础上让受过培训的合格专业人士参与本文委员会的工作，

(2)　需要鼓励积极针对女性的国家科技教育计划，引导并培训女性进入气象和相关科学领域，

(3)　需要为招聘妇女参与 NMHS 的工作而提供更多的机会和鼓励，并为她们的职业向最高水平发展提供平等的机会，

欢迎并支持妇女代表积极参与本委员会的工作，

敦促妇女更多地参与本委员会的工作；

建议会员：

(1)　继续鼓励、促进和推动妇女在科学技术领域享有平等的机会，以便她们能做好诸如气象和相关科学领域的职业准备；

(2)　为妇女参与本委员会的活动提供方便；

(3)　积极鼓励并支持妇女平等参与气象和相关科学领域决策层的所有工作尤其是 CBS 及其工作计划；

进一步建议各会员鼓励在学校学习科学，从而确保男女平等参与该领域的工作；

要求委员会主席向本委员会第 14 次届会报告休会期间实施本决议的主要进展情况；

决定任命并支持一名具有合适专业技能的女性担任男女平等问题联络员，她将向本委员会主席报告工作。

注：　本决议替代决议 1 (CBS- Ext (98))，后者不再有效。

决议 2(CBS-Ext.(06))

审议基本系统委员会以往的决议和建议

基本系统委员会，

注意到委员会对其特别届会（2006）前通过的决议和建议所采取的行动，

决定：

(1)　保留 CBS-Ext.(98) 的决议 2、CBS-12 (2000) 的决议 1，以及 CBS-13 (2005) 的决议 1 和 2 有效；

(2)　保留 CBS-13 (2005) 的建议 1 有效；

(3)　特别届会（2006）前通过的其他建议不再保留有效 。

届会通过的建议

建议 1（CBS-Ext.(06)）

采用世界大地测量系统和全球大地基准面模式作为观测站定位的基准

基本系统委员会，

注意到：

(1) 天气站的位置是用经度、纬度和高度给出的，

(2) WMO 还没有一个用作台站水平和垂直位置基准的标准基准体系，

(3) 经度和纬度都需要一个通用的标准定位体系作为基准，

(4) 《国际气象词汇》(WMO-No. 182) 把平均海平面 (MSL) 定义为 19 年周期内对所有阶段的趋势取平均海面水平，它通常是根据在一个固定基准面上观测的每小时高度确定的，而这个 MSL 的固定基准面是已经确定的，

考虑到：

(1) 标准基准系统《世界大地测量系统 1984》 (WGS 84) 可在全球范围内适用于所有的气象学应用，

(2) 大多数区域和国家系统都参考 WGS 84，

(3) WGS 84 为其他国际组织，如 ICAO 所认同，

(4) 《地球大地基准面模式—EGM-96》可适用于所有的气象学应用，

建议：

(1) 用《世界大地测量系统 1984》 (WGS 84) 作为水平定位的主基准；

(2) 用《地球大地基准面模式—EGM-96》作为确定 MSL 的固定基准面；

(3) 据此对《WMO 技术规则》(WMO-No. 49) 和相应的 WMO 手册进行更新。

建议 2（CBS-Ext.(06)）

审议《全球观测系统指南》（WMO No. 488）

基本系统委员会，

回顾了 经 CBS-12 同意(《基本系统委员会第十二次届会含决议和建议的最终节略报告》(WMO-No. 923) 总摘要第 6.1.48—6.1.52 段)，需要对《全球观测系统指南》进行审查，

注意到：

(1) CBS 法规材料专题组、OPAG-IOS 的 GOS 发展专家组，以及 OPAG-IOS 的综合观测系统实施协调组在这方面所开展的工作，

(2) 根据 CBS-12 的决定(《基本系统委员会第十二次届会含决议和建议案的最终节略报告》(WMO-NO. 923) 总摘要第 6.1.52 段），已经完成了对《全球观测系统指南》修订草案的全面审核过程，

建议出版《全球观测系统指南》的修订版；

要求秘书长为尽快出版《全球观测系统指南》的修订版作出安排。

建议 3（CBS-Ext.(06)）

对《全球电信系统手册》（WMO-No.386）第一卷第一和第二部分的修改

基本系统委员会，

注意到：

(1) 决议 2 (Cg-14) – 2004-2007 世界天气监视网计划，

(2) 《全球电信系统手册》（WMO-No. 386）第一卷，全球方面，第一和第二部分，

建议《全球电信系统手册》第一卷，全球方面的第一和第二部分应该按照本建议的附录进行修订，并从 2007 年 11 月 7 日开始生效；

要求秘书长按照本建议的附录对《全球电信系统手册》第一卷，全球方面的第一和第二部分进行修订；

授权秘书长对《全球电信系统手册》第一卷，全球方面的第一和第二部分的内容作纯编辑上的修改。

建议 3（CBS-Ext.(06)）的附录

对《全球电信系统手册》（WMO-No.386）第一卷第一和第二部分的修改

（English only）

PART I, ORGANIZATION OF THE GLOBAL TELECOMMUNICATION SYSTEM
ATTACHMENT I–5, PLAN FOR MONITORING THE OPERATION OF THE WORLD WEATHER WATCH

Read the beginning of paragraph 5.2 as follows:

5.2 The responsibilities for carrying out the real-time and non-real-time monitoring activities are given in Tables A and B. An essential part of the monitoring plan is that information should be exchanged between adjacent centres on the GTS in order that telecommunication problems in particular may be readily identified. A special aspect of the exchange of information is that procedures should be developed to ensure that no doubts exist that a bulletin contains all the observations available for inclusion in it. In the case of standard bulletins containing routine observations, the contents of the bulletins should always conform to the list included in the appropriate WMO publication, as amended. When the observations from some stations included in the publication are not available for any reason, ~~NIL should appear in place of the coded report~~ the reports should be properly encoded as NIL reports. As a further check on completeness, NMCs should send messages to the associated RTH, preferably in advance, when it is known that observations from listed stations are not (or will not be) available. It is important that all WWW centres (NMCs, RSMCs, RTHs and WMCs) make a contribution to the overall monitoring effort. Obviously, centres having a multiple role will make more than one contribution. In the contributions, the following points should be taken into account:

For the monitoring at bulletin level, additional or subsequent (RRx) and corrected (CCx) bulletins should be included;

PART II, OPERATIONAL PROCEDURES FOR THE GLOBAL TELECOMMUNICATION SYSTEM

Read the paragraph 2.3.2.2 as follows for the parts related to ii and BBB:

ii It shall be a number with two digits. When an originator or compiler of bulletins issues two or more bulletins with the same $T_1T_2A_1A_2$ and CCCC the ii shall be used to differentiate the bulletins and will be unique to each bulletin.

Alphanumeric bulletins containing reports prepared at the main synoptic hours for the stations included in the Regional Basic Synoptic Networks or stations included in the Regional Basic Climatological Networks shall be compiled into bulletins with ii in the series 01 to 19. This does not apply to bulletins

compiled in ~~BUFR or~~ CREX code.

Alphanumeric bulletins containing "additional" data as defined in Resolution 40 (Cg-XII) shall be compiled into bulletins with ii above 19. This does not apply to bulletins compiled in ~~BUFR or~~ CREX code.

For ~~some~~ bulletins ~~such as those~~ compiled in GRIB, BUFR or CREX code or containing pictorial information, the use of ii is defined in the tables contained in Attachment II-5. Originators or compilers of bulletins shall use the ii values from these tables when they are defined for the purpose for which a bulletin is being intended.

For all bulletins ii shall only be used to designate "additional" data as defined in Resolution 40 (Cg-XII) if the same heading is never used for essential data and it complies with all the requirements above. If this is not the case, a unique CCCC be used as described below.

BBB An abbreviated heading defined by T1T2A1A2 ii CCCC YYGGgg shall be used only once. Consequently, if this abbreviated heading has to be used again for an addition, a correction or an amendment, it shall be mandatory to add an appropriate BBB indicator, identified by a three-letter

indicator which shall be added after the date-time group.

The BBB indicator shall have the following forms

RRx for additional or subsequent issuance of bulletins;

CCx for corrections to previously relayed bulletins;

AAx for amendments to previously relayed bulletins;

where x is an alphabetic character of A through as described in Attachment II-12;

Bulletins containing observational or climatic data (surface or upper-air) from land stations will be compiled from a defined list of stations. ~~This does not apply to bulletins compiled in BUFR or CREX code.~~ The abbreviated headings and the contents of bulletins shall be published in WMO Publication No. 9 Volume C1 – *Catalogue of Meteorological Bulletins*

Read the title of paragraph 2.3.3 as follows:

2.3.3 ~~Text~~Contents of meteorological bulletins

Add new paragraph (d) in paragraph 2.3.3.1:

(d) When all the reports normally contained in a routine message are not available at the normal time of transmission, the text NIL shall be sent.

Read paragraph 2.3.3.2.7 as follows:

2.3.3.2.7 NIL - In the case of routine messages containing meteorological reports, NIL shall be inserted following the appropriate station index number (which should however retain its proper place in the coded message) when the report from that station is included in the published contents of the bulletin (in the Catalogue of Meteorological Bulletins and elsewhere) but is not available at the time of transmission. The same procedures also apply to other coded information (such as CLIMAT, CLIMAT TEMP).

~~When the whole bulletin for a routine message is not available at the normal time of transmission, the text NIL shall be sent.~~

~~Note: For messages containing aerodrome forecasts in the TAF code, NIL should not be used.~~

Insert paragraph 2.3.3.3.1 and 2.3.3.3.2 as follows:

2.3.3.3.1 The text of meteorological bulletins in binary representation shall consist of one single message and start by the sequence….followed by the code indicator coded in International Alphabet No. 5.

2.3.3.3.2 NIL - In the case of BUFR routine bulletins containing meteorological reports, all fields in the relevant subsets within Section 4 (Data Section) of the BUFR message, other than the station identifier and delayed replication factors, shall be set to the appropriate missing value, when the report from that station is included in the published contents of the bulletin (in the Catalogue of Meteorological Bulletins and elsewhere) but is not available at the time of transmission.

Add new paragraph 2.5.7

2.5.7Acknowledgment messages

Acknowledgment procedures from a centre receiving a bulletin to its originating centre or to other centre (e.g. a relaying centre) should comply with standard GTS addressed messages (reference: paragraph 2.4 of Part II of Volume I of the Manual on the GTS), as very urgent administrative messages transmitted as a service message. The format for the content of an addressed message for acknowledgment of receipt of bulletin should be as follows:

BMBB01 $C_aC_aC_aC_a$ YYGGgg (BBB)
CCCC
QSL TTAAii YYGGgg $C_oC_oC_oC_o$ (BBB) (DDHHMM)
(optional text)

Notes:

$C_aC_aC_aC_a$ = location indicator of the destination centre, usually the originating centre of the message being acknowledged

CCCC = international location indicator of the centre sending the acknowledgement

TTAAii $C_oC_oC_oC_o$ YYGGgg (BBB) is the abbreviated heading of the message being acknowledged, prefixed by the word QSL

DDHHMM is the day-time group (day, hour, minute in UTC) of actual reception of the acknowledged message at the centre CCCC and is inserted when required

The third line of the text of the message is added as necessary

Example:

BMBB01 PHEB 051132
AMMC
QSL WEIO21 PHEB 051130 051132

ATTACHMENT II–4

Read the title of Attachment II-4 as follows:

FORMAT OF METEOROLOGICAL MESSAGES

Read paragraph 5 as follows:

5. EXAMPLES OF PRESENTATION OF NIL TEXTS:

(a) SYNOP bulletin

SMRS10 RUMS 220600

NIL

(b) TEMP bulletin

USSN01 ESWI 011200

NIL

(c) CREX bulletin

KOMS10 FAPR 220600

NIL

(d) BUFR bulletin

IUKN01 EGGR 221200

NIL

ATTACHMENT II–5

Table A

In the column priority,

Replace **priority "3" by priority "2" for T_1=I**

Read Note (1) as follows:

"Priority level: 1 is allocated to service messages

2 is allocated to data and request messages

3 is allocated to seismic waveform data (T_1T_2 = SY)

4 is allocated to administrative messages"

Delete the column "Max length (octets)"**.**

Table B1

Add for T_1 =S, T_2 = Z for sea level data and deep-ocean tsunami data (any alphanumeric format);

Add for T_1 = S, T_2 = Y for seismic waveform data (any format)

For T_1 = F, read as follows:

Designator	Data type	Code form (name)
C	Aerodrome (VT< 12 hours)	FM 51 (TAF)
	— — — — — — — —	
T	Aerodrome (VT ≥ 12 hours)	FM 51 (TAF)

Read Table B3 as follows:

Table B3

Data type designator T_2 when T_1=I or J

T_2	Data type
N	Satellite data
O	Oceanographic/limnographic (water property)
P	Pictorial
S	Surface/sea level
T	Text (plain language information)
U	Upper air data
X	Other data types

Tables C1 and C2

Add: "Note: For T_1T_2=SZ, A_1A_2 areas designator from Table C1 should be used"

Read Table C6 as follows:

Table C6

Data type designator A_1

(when T_1 = I or J)

Instructions for the proper application of the data type designators

1. The designators specified in this table should be used to the greatest extent possible to indicate the type of data contained within the body of the BUFR bulletin.
2. Where more than one data type is contained in the bulletin, the designators for only one of the data types should be used.
3. When the table does not contain a suitable designator for the data types, an alphabetic designator which is not assigned in the table should be introduced and the WMO Secretariat notified.

T_1T_2	A_1	Data type	TAC Correspondance	Data category/ sub-category (Common table C-13)
IO	B	Buoy observations	BUOY	001/025
	I	Sea ice		
	P	Sub-surface profiling floats	TESAC	031/004
	R	Sea surface observations	TRACKOB	031/001
	S	Sea surface and below Soundings	BATHY, TESAC	031/005
	T	Sea surface temperature		
	W	Sea surface waves	WAVEOB	031/002
	X	Other sea environmental		
IP	I	Satellite imagery data		

	C	Radar composite imagery Data		
	R	Radar imagery data		
	X	Not defined		
IS	A	Routinely scheduled observations for distribution from automatic (fixed or mobile) land stations (e.g. 0000, 0100, … or 0220, 0240, 0300, …, or 0715, 0745, ... UTC) ii = 01-29	n/a	000/006
	A	N-minute observations from automatic (fixed or mobile) land stations ii = 30-59	n/a	000/007
	B	Radar reports (parts A and B)	RADOB	006/003
	C	Climatic observations from land Stations Ii=01-45	CLIMAT	000/020
	C	Climatic observations from marine stations Ii=46-59	CLIMAT SHIP	001/020
	D	Radiological observation	RADREP	010/001
	E	Ozone measurement at surface	n/a	008/000
	F	Source of atmospherics	SFAZI, SFLOC, SFAZU	000/030
	I	Intermediate synoptic observations from fixed land stations Ii=01-45	SYNOP (SIxx)	000/001
	I	Intermediate synoptic observations from mobile land stations ii=46-59	SYNOP MOBIL	000/004
	M	Main synoptic observations from fixed land stations ii = 01-45	SYNOP (SMxx)	000/002
	M	Main synoptic observations from mobile land stations ii = 46-59	SYNOP MOBIL	000/005
	N	Synoptic observations from fixed land stations at non-standard time (i.e. 01, 02, 04, 05, ... UTC) ii = 01 – 45	SYNOP (SNxx)	000/000
	N	Synoptic observations from mobile land stations at non-standard time (i.e. 01, 02, 04, 05, ... UTC) ii = 46-59	SYNOP MOBIL	000/003
	R	Hydrologic reports	HYDRA	000/040
	S	Synoptic observations from marine stations ii = 01-19	SHIP	001/000
	S	One-hour observations from automatic marine stations ii = 20-39	n/a	001/006
	S	N-minute observations from automatic marine stations	n/a	001/007

		ii = 40-59		
	T	Tide gauge observations ii=01-19	n/a	001/030
	T	Observed water level time series ii=20-39	n/a	001/031
	V	Special aeronautical observations (SPECI)	SPECI	000/011
	W	Aviation routine weather observations (METAR)	METAR	000/010
	X	Other surface data	IAC, IAC FLEET	
IT	A	Administrative message		
	B	Service message		
	R	Request for data (inclusive of type)		
	X	Other text messages of information		
IU	A	Single level aircraft reports (automatic)	AMDAR	004/000
		Single level aircraft reports (manual)	AIREP/PIREP	004/001
	B	Single level balloon reports	n/a	
	C	(used for single level satellite-derived reports – see Note 3)	SAREP/SATOB	005/000
	D	Dropsonde/Dropwindsondes	TEMP DROP	002/007
	E	Ozone vertical sounding	n/a	008/001
	I	Dispersal and transport analysis	n/a	009/000
	J	Upper wind from fixed land stations (entire sounding) ii = 01-19	PILOT (parts A, B, C, D)	002/001
	J	Upper wind from mobile land stations (entire sounding) ii = 20-39	PILOT MOBIL (parts A, B, C, D)	002/003
	J	Upper wind from marine stations (entire sounding) ii = 40-59	PILOT SHIP (parts A, B, C, D)	002/002
	K	Radio soundings from fixed land stations (up to 100 hPa) Ii=01-19	TEMP (parts A, B)	002/004
	K	Radio soundings from mobile land stations (up to 100 hPa) Ii=20-39	TEMP MOBIL (parts A, B)	002/006
	K	Radio soundings from marine stations (up to 100 hPa) ii=40-59	TEMP SHIP (parts A, B)	002/005
	M	Model derived sondes		
	N	Rocketsondes		
	O	Profiles of aircraft observations in ascending /descending	AMDAR	002/020
	P	Profilers	PILOT	002/010
	Q	RASS temperature profilers	TEMP	002/011
	R	(used for radiance data – see Note 3)		
	S	Radiosondes/pibal reports from fixed land stations (entire sounding)	TEMP (parts A, B, C, D)	002/004

		ii = 01-19		
	S	Radio soundings from mobile land stations (entire sounding) ii=20-39	TEMP MOBIL (parts A, B, C, D)	002/006
	S	Radio soundings from marine stations (entire sounding) ii = 40-59	TEMP SHIP (parts A, B, C, D)	002/005
	T	(used for satellite-derived sondes – see Note 3)	SATEM SARAD SATOB	
	U	Monthly statistics of data from upper-air stations ii = 01-45	CLIMAT TEMP	002/025
	U	Monthly statistics of data from marine stations ii = 46-59	CLIMAT TEMP SHIP	002/026
	W	Upper wind from fixed land stations (up to 100 hPa) ii = 01-19	PILOT (parts A, B)	002/001
	W	Upper wind from mobile land stations (up to 100 hPa) ii = 20-39	PILOT MOBIL (parts A, B)	002/003
	W	Upper wind from marine stations (up to 100 hPa) ii = 40-59	PILOT SHIP (parts A, B)	002/002
	X	Other upper air reports		
JO	I	Sea ice		
	S	Sea surface and below soundings		
	T	Sea surface temperature		
	W	Sea surface waves		
	X	Other sea environmental data		
JS	A	Surface area forecast (e.g.airways)		
	D	Radiological forecast	RADOF	
	M	Surface forecasts (e.g. MOS)		
	O	Maritime forecast	MAFOR	
	P	Forecast amendments (airways)		
	R	Hydrologic forecast	HYFOR	
	S	Forecast amendments (TAF)		
	T	Aerodrome forecast (TAF)		
	X	Other surface forecasts		
JT	E	Tsunami		
	H	Hurricane, typhoon, tropical Storm warning		
	S	Severe weather, SIGMET		
	T	Tornado warning		
	X	Other warnings		
JU	A	Forecast at single levels		

	B	Binary coded SIGWX, Embedded Cumulonimbus		
	C	Binary coded SIGWX, Clear air turbulence		
	F	Binary coded SIGWX, Fronts		
	N	Binary coded SIGWX, Other SIGWX parameters		
	O	Binary coded SIGWX, Turbulence		
	S	Forecast soundings		
	T	Binary coded SIGWX, Icing/Tropopause		
	V	Binary coded SIGWX, Tropical storms, sandstorms, volcanoes		
	W	Binary coded SIGWX, High-level winds		
	X	Other upper air forecasts		

Notes:

Content of ISMx, ISIx, ISNx messages corresponds to the content of traditional SYNOP messages SMxx, SIxx, SNxx.

Category/Subcategory = 000/000 identifies SYNOP data from 01, 02, 04, 05, 07, 08, 10, 11, 13, ..UTC). Thus SNxx in traditional SYNOP corresponds to ISNx in BUFR.

Designators A_1 for T_1T_2 already used for satellite data (e.g. IUC, IUR, IUT) are not allocated and reserved for future allocations, pending the allocation of A_1 for T_1T_2 = IN (satellite data).

Read Table C7 as follows:

Table C7

Data type designator T_2 and A_1

(when T_1 = K)

T_1T_2	A_1	Data type	TAC Correspondence	Data category/ sub-category (Common table C-13)
KO	B	Buoy observations	BUOY	001/025
	I	Sea ice		
	P	Sub-surface profiling floats	TESAC	031/004
	R	Sea surface observations	TRACKOB	031/001
	S	Sea surface and below Soundings	BATHY, TESAC	031/005
	T	Sea surface temperature		
	W	Sea surface waves	WAVEOB	031/002
	X	Other sea environmental		
KS	A	Routinely scheduled observations for distribution from automatic (fixed or mobile) land stations (e.g. 0000, 0100, … or 0220, 0240, 0300, …, or 0715, 0745, ... UTC) ii = 01-29	n/a	000/006

T_1T_2	A_1	Data type	TAC Correspondence	Data category/ sub-category (Common table C-13)
	A	N-minute observations from automatic (fixed or mobile) land stations ii = 30-59	n/a	000/007
	B	Radar reports (parts A and B)	RADOB	006/003
	C	Climatic observations from land stations ii = 01-45	CLIMAT	000/020
	C	Climatic observations from marine stations ii = 46-59	CLIMAT SHIP	001/020
	D	Radiological observation	RADREP	010/001
	E	Ozone measurement at surface	n/a	008/000
	F	Source of atmospherics	SFAZI, SFLOC, SFAZU	000/030
	I	Intermediate synoptic observations from fixed land stations ii = 01-45	SYNOP (SIxx)	000/001
	I	Intermediate synoptic observations from mobile land stations ii = 46-59	SYNOP MOBIL	000/004
	M	Main synoptic observations from fixed land stations ii = 01-45	SYNOP (SMxx)	000/002
	M	Main synoptic observations from mobile land stations ii = 46-59	SYNOP MOBIL	000/005
	N	Synoptic observations from fixed land stations at non-standard time (i.e. 01, 02, 04, 05, 07, 08, 10, 11, 13, ..,UTC) ii = 01 – 45	SYNOP (SNxx)	000/000
	N	Synoptic observations from mobile land stations at non-standard time (i.e. 01, 02, 04, 05, 07, 08, 10, 11, 13, ..UTC) ii = 46-59	SYNOP MOBIL	000/003
	R	Hydrologic reports	HYDRA	000/040
	S	Synoptic observations from marine stations ii = 01-19	SHIP	001/000
	S	One-hour observations from automatic marine stations ii = 20-39	n/a	001/006
	S	N-minute observations from automatic marine stations ii = 40-59	n/a	001/007
	V	Special aeronautical observations (SPECI)	SPECI	000/011
	W	Aviation routine weather observations	METAR	000/010

T_1T_2	A_1	Data type	TAC Correspondence	Data category/ sub-category (Common table C-13)
		(METAR)		
	X	Other surface data	IAC, IAC FLEET	
KU	A	Single level aircraft reports (automatic)	AMDAR	004/000
		Single level aircraft reports (manual)	AIREP/PIREP	004/001
	B	Single level balloon reports	n/a	
	C	Single level satellite-derived reports	SAREP	005/000
	D	Dropsonde/dropwindsondes	TEMP DROP	002/007
	I	Dispersal and transport analysis	n/a	009/000
	J	Upper wind from fixed land stations (parts A, B, C and D) ii = 01-19	PILOT	002/001
	J	Upper wind from mobile land stations (parts A, B, C and D) ii = 20-39	PILOT MOBIL	002/003
	J	Upper wind from marine stations (parts A, B, C and D) ii = 40-59	PILOT SHIP	002/002
	K	Radio soundings from fixed land stations (parts A and B) ii = 01-19	TEMP	002/004
	K	Radio soundings from mobile land stations (parts A and B) ii = 20-39	TEMP MOBIL	002/006
	K	Radio soundings from marine stations (parts A and B) ii = 40-59	TEMP SHIP	002/005
	L	Ozone vertical profile	n/a	008/001
	M	Model derived sondes		
	N	Rocketsondes		
	O	Profiles of aircraft observations in ascending /descending	AMDAR	002/020
	P	Profilers	PILOT	002/010
	Q	RASS temperature profilers	TEMP	002/011
	S	Radiosondes/pibal reports from fixed land stations (parts A, B, C and D) ii = 01-19	TEMP	002/004
	S	Radio soundings from mobile land stations (parts A, B, C and D) ii = 20-39	TEMP MOBIL	002/006
	S	Radio soundings from marine stations (parts A, B, c and d) ii = 40-59	TEMP SHIP	002/005
	T	Satellite derived sondes		
	U	Monthly statistics of data from upper-air stations	CLIMAT TEMP	002/025

T_1T_2	A_1	Data type	TAC Correspondence	Data category/ sub-category (Common table C-13)
		ii = 01-45		
	U	Monthly statistics of data from marine stations ii = 46-59	CLIMAT TEMP SHIP	002/026
	W	Upper wind from fixed land stations (parts A and B) ii = 01-19	PILOT	002/001
	W	Upper wind from mobile land stations (parts A and B) ii = 20-39	PILOT MOBIL	002/003
	W	Upper wind from marine stations (parts A and B) ii = 40-59	PILOT SHIP	002/002
	X	Other upper air reports		
KF	A	Surface area forecast (e.g. airways)		
	D	Radiological forecast	RADOF	
	M	Surface forecasts (e.g. MOS)		
	O	Maritime forecast	MAFOR	
	P	Forecast amendments (airways)		
	R	Hydrologic forecast	HYFOR	
	S	Forecast amendments (TAF)		
	T	Aerodrome forecast (TAF)		
	X	Other surface forecasts		
KP	I	Sea ice		
	S	Sea surface and below soundings		
	T	Sea surface temperature		
	W	Sea surface waves		
	X	Other sea environmental		
KT	E	Tsunami		
	H	Hurricane, typhoon, tropical storm warning		
	S	Severe weather, SIGMET		
	T	Tornado warning		
	X	Other warnings		
KV	A	Forecast at single levels		
	B	Coded SIGWX, Embedded Cumulonimbus		
	C	CREX coded SIGWX, Clear air turbulence		
	F	CREX coded SIGWX, Fronts		
	N	CREX coded SIGWX, Other SIGWX parameters		
	O	CREX coded SIGWX, Turbulence		

T_1T_2	A_1	Data type	TAC Correspondence	Data category/ sub-category (Common table C-13)
	S	Forecast soundings		
	T	CREX coded SIGWX, Icing/Tropopause		
	V	CREX coded SIGWX, Tropical storms, sandstorms, volcanoes		
	W	CREX coded SIGWX, High-level winds		
	X	Other upper air forecasts		

Note: T_1T_2=SZ is allocated to sea level data and deep-ocean tsunami data in any alphanumeric form, including CREX.

Add new Table D3

Table D3

Designator ii

(when T_1T_2 = FA, UA)

T_1T_2	Designator ii	**Data type**	**Code form (name)**
FA	**01 to 49**	**Aviation area /advisories**	**FM 53 (ARFOR)/[TEXT]**
	50 to 59	**GAMET**	**[TEXT]**
	60 to 99	**Not assigned**	
UA	**01 to 59**	**Routine aircraft reports**	**ICAO AIREP**
	60 to 69	**Special aircraft reports, except for volcanic ash**	
	70 to 79	**Special aircraft reports related to volcanic ash**	
	80 to 99	**Routine aircraft reports (See Note)**	

Note: Noting that there is no known use of the series 80-99, these series are allocated to routine aircraft reports up to 1 September 2008. After 1 September 2008, the series should be reserved for future use.

ATTACHMENT II–12

Read Attachment II-12 as follows:

INSTRUCTIONS FOR THE USE OF THE INDICATOR BBB

1. The BBB indicator ~~should only~~ shall be included in the abbreviated heading lines of ~~delayed~~ additional, subsequent, corrected or amended bulletins by those centres which are responsible for preparing or compiling the bulletins concerned.

2. The BBB indicator ~~should only~~ shall be added when the abbreviated heading line defined by $T_1T_2A_1A_2ii$ CCCC YYGGgg has already been used for the transmission of ~~the~~ a corresponding initial bulletin. Once the initial bulletin has been transmitted, the centre responsible for preparing or compiling the bulletin uses the BBB indicator to transmit additional, subsequent, ~~or~~ corrected ~~reports~~ or amended ~~information~~ messages for the same ~~abbreviated~~ $T_1T_2A_1A_2ii$ CCCC YYGGgg, but appended with the appropriate form of BBB indicator, following these guidelines:

(a) To transmit ~~weather~~ information or reports ~~which are~~ normally contained in ~~the~~ an initial bulletin ~~but which were received~~ after the initial bulletin has been transmitted or for a subsequent or additional issuance of a bulletin whose T1T2A1A2II CCCC YYGGgg would not be unique without a BBB field and CCx or AAx does not apply. The ~~form of the~~ BBB indicator to be used is ~~then~~ RRx, where x =:

A, for the first bulletin ~~containing delayed reports~~ after the issuance of the initial bulletin;

B, if ~~a second bulletin~~ another bulletin ~~containing delayed reports is subsequently necessary~~ needs to be issued;

and so on up to and including x = X;

(b) To transmit a bulletin containing corrected ~~to~~ information or reports that have already been ~~included~~ issued in a previous bulletin ~~which has previously been transmitted~~. The ~~form of the~~ BBB indicator to be used is ~~then~~ CCx, where x =:

A, for the first bulletin containing ~~only~~ corrected reports or information;

B, if a second bulletin containing corrected reports or information is ~~subsequently necessary~~ issued;

and so on up to including x = X;

To transmit a bulletin containing amendments to the ~~processed~~ information included in a previously issued bulletin ~~which has previously been sent~~. The ~~form of the~~ BBB indicator to be used is AAx, where x = :

A, for the first bulletin containing amendments to ~~processed~~ information;

B, for a second bulletin containing ~~amended processed~~ amendments to information;

and so on up to and including x = X;

(d) If more than 24 BBB indicators ~~or~~ have to be used for the sequences detailed in (a), (b) and (c) above ~~have to be used~~, then x = X should continue to be used ~~subsequently~~;

(e) For ~~each of~~ (a), (b) and (c) above, the characters x = Y and x = Z are to be used for the special purposes ~~as~~ indicated below:

(i) x = Y should be used for the encoding of BBB when a system failure causes loss of the record of the sequence of character values assigned to x;

(ii) x = Z should be used for the encoding of BBB when bulletins are prepared or compiled more than 24 hours after the time of observation.

~~3. The indicator BBB should also be included in the abbreviated headings of bulletins used for the transmission of large sets of information which need to be segmented into several bulletins. The form of the indicator BBB to be used is then Pxx, where xx =AA for the first bulletin containing the first segment of the set of~~

~~information;~~

~~AB for the second bulletin containing the second segment;~~

~~and so on including AX, AY, AZ, BA etc., as required.~~

~~xx = Zx for the last bulletin containing the last segment~~

~~(e.g.: AA = part 1, AB = part 2, ZC = third and last part)~~

~~The values of the first x can be A through Y and the values of the second x can be A through Z.~~

~~4. For every bulletin that a centre is responsible for preparing or compiling and for each corresponding abbreviated heading defined by T1T2A1A2ii CCCC YYGGgg each centre should establish and update the sequence of the forms of BBB indicator used in accordance with the specifications above.~~

3. An RTH on the GTS should ensure the relay of the bulletins received in accordance with its routeing directories even if the bulletins containing BBB indicators have not been received in the correct sequence.

ATTACHMENT II–15

In* FOREWORD, *Read the three last paragraphs as follows:

Considerable efforts have been applied in defining the framework for applying TCP/IP to the GTS and for the orderly transition from the OSI/X.25 based origin of the GTS. Furthermore, it is understood that TCP/IP will be the basis for all new telecommunication functions implemented in support of the WMO Information Systems (WIS).

Procedures are defined to ensure that the primary function of the GTS in carrying real time operational traffic with minimum delay is preserved. The issue of securing the GTS from interference via the Internet is also addressed in general terms. Reliance must however be placed on all Members with a TCP/IP based connection to the GTS, who are also connected to the Internet, to implement and maintain thorough security practices.

This Attachment was originally written as the culmination of work undertaken by CBS during 1997 and 1998. The TCP/IP procedures have since been implemented by most national Centres. The opportunity has been taken to capture the practical experiences gained in the use of TCP/IP and update material accordingly. In addition, a World Wide Web resource has been set-up which gives further details of the technical implementation of many of the concepts and procedures introduced within this Attachment. This is available on the following WMO web pages:

http://www.wmo.int/web/www/manuals.html

http://www.wmo.int/web/www/documents.html

Read* Chapter 1 *as follows:

1. Introduction

Historical perspective

The GTS at present is predominantly used to support the message switching application using message exchange

in WMO format. This exchange is done using:

the TCP/IP protocol suite,

limited OSI transport service based on point to point X.25,

and is supplemented by broadcasts.

This implementation is adequate for the legacy application of message switching but it is recognized that it requires continuous improvements to fully support the various WMO programs and the new requirements of the WIS. For example, the GTS should support:

Distributed Data Bases (DDB);

Data exchange between non adjacent centres;

Exchange of information that cannot readily be handled by message switching systems (MSSs).

Purpose of this Attachment

This Attachment is intended to assist Centres to implement Transmission Control Protocol/Internet Protocol (TCP/IP) based services on the GTS. Throughout this document, it is understood that the implementation of TCP/IP protocols include all essential protocols that are normally part of the TCP/IP protocol suite, as described in the Internet Engineering Task Force (IETF) reference documents RFC112 and RFC1123. These documents are available from the IETF web site at

http://www.ietf.org/rfc/

The aim of this Attachment is to describe those aspects of the application of TCP/IP that apply specifically to the GTS to meet new requirements and also the long established routine data exchange undertaken by Message Switching Systems (MSSs). The Attachment takes account of the technical evolution of the GTS from an X.25 based network, and maintains the philosophy that Centres continue to be autonomous as far as possible. It is recognised that the timing for implementation of new systems is determined by individual Members in the light of their available resources and relative priorities, but it is also understood that new WIS functionality is expected to be achieved mostly via TCP/IP protocols.

This Attachment does not cover fundamentals of TCP/IP but focuses on those aspects that are essential for successful application on the GTS. Such aspects include appropriate use of the GTS compared with the Internet, co-existence of the GTS and the Internet, IP and X.25 and Autonomous System addressing, router management, TCP/IP application services (such as FTP) and fault management. The Attachment also gives an overview of recommended security practices with TCP/IP, but does not address security issues and practices in detail, this being a highly complex subject in itself. Some references on TCP/IP and on computer security are given in Appendix 4. A more comprehensive discussion on security can be found in the “WMO Guide on Information Technology Security”, which is available on the WMO web site at

http://www.wmo.int/web/www/manuals.html

Relationship of the Internet and GTS

The Internet has grown rapidly in capacity, penetration and diversity of applications. As well, day to day

performance of the Internet, which used to be recognized as a weakness, is now reaching acceptable levels of reliability in many countries. It should be noted however that the very nature of the Internet will always mean that no one can build a system using the Internet for which specific service levels can be guaranteed, since the Internet is the result of the amalgamation of numerous telecommunication systems, for which no operator has complete responsibility.

It is therefore recognized that the Internet can be used as:

an underlying technology for some components of the GTS in special conditions,

as a backup to the GTS, and

as a complement to the GTS.

Table 1 Usage of GTS and Internet

Communication Component	**Underlying Technologies**	**Function**
GTS	Dedicated links, high availability network clouds, VPN via Internet for backup or when no other technology is available	Delivery of time critical communication for weather, water and climate operations
Internet	As provided by supplier	Communication for less critical requirements and possibly for large volumes of data

Coexistence with the Internet also brings some special security problems that must be addressed to ensure the GTS can fulfil its function. In particular, the networks must be engineered in such a way that the GTS is protected from general Internet traffic and is secured against inappropriate use and unauthorised access. For example, the use of IP and dynamic routing protocols such as BGP4 (Border Gateway Protocol) on the GTS will have to be managed in such a way as to allow communication between non-adjacent Centres only with the knowledge and concurrence of all intermediate Centres. Otherwise there is a danger that large amounts of GTS capacity could be consumed by non-routine traffic, to the detriment of real time operational data exchange.

Evolution of the GTS

The use of the ISO/ITU standard X.25 was adopted by WMO in the early 1980's to facilitate the exchange of data and products encoded in WMO binary code forms (GRIB, BUFR etc) and to act as a base for higher level OSI applications. Although OSI was regarded at the time as the strategic direction for the evolution of data communications, this has changed. Today, there is no doubt TCP/IP protocols are the most accepted and widespread protocols for exchange of data.

TCP/IP is still appropriate because:

it is the dominant protocol suite in everyday use being now packaged with virtually all implementations of Unix and many PC operating systems;

it offers a wide range of standard applications (file transfer, electronic mail, remote logon, World Wide

Web, etc.) that will greatly reduce the need for the WMO community to develop special procedures and protocols as it has had to do in the past.

it provides useful features such as automatic alternate routing (in a meshed network) which could improve the reliability of the GTS.

This Attachment however takes account of the fact that centres have based plans and developed systems in line with the OSI standards, particularly X.25, as endorsed by WMO and specified in the Manual on the GTS. The transition to TCP/IP based services must continue in an orderly fashion from the X.25 based links in such a way that operation of the GTS is not disrupted or put at risk.

The Attachment provides for this by defining procedures for:

an interim hybrid based on:

carrying TCP/IP based services over an X.25 network service; or

carrying X.25 data over IP based network service via directly connected routers;

subsequent transition to pure IP utilising directly connected routers, together with TCP/IP based application services, such as TCP sockets or File Transfer Protocol (FTP).

The transition to the second step (pure IP) is desirable because:

Operating TCP/IP over X.25 may not provide expected throughput because of router processing overheads involved in packet encapsulation of IP frames within X.25 packets. This appears to become worse as line speeds increases. Limited tests which have been done between Centres in Region VI indicate efficiency less than 70% at 64Kbps.

The management and maintenance activities required for the X.25 network and associated packet switches can be avoided.

Carrying X.25 over IP requires use of proprietary features of specific router brands.

In order to move to pure IP, it is necessary to modify MSSs at each Centre to make use of TCP/IP services such as FTP and Sockets. This is covered in some detail in Chapter 4.

Other related issues

Many Centres now have experience of TCP/IP on the GTS. Experience has shown that the main technical issues, which need to be addressed to establish widespread use of TCP/IP on the GTS, are:

agreed methods for the message switching application to use TCP/IP either directly or via higher level applications e.g. FTP;

an agreed file naming convention and standard for metadata associated with files;

a community wide Naming and Addressing agreement.

It is the aim of this Attachment to make some progress with these issues, some of which lie in the domain of Data Management as much as Telecommunications. It must also be recognised that overall, the existing GTS is not a homogenous network in the true sense of the word, but a collection of regional networks and discrete

point-to-point links. Also managed networks using Frame Relay and MPLS (Multi Protocol Label Switching) technology are now part of the GTS. These developments introduce new issues regarding multi lateral co-operation in operating the GTS. While these issues are raised, they are beyond the scope of this Attachment.

In* Chapter 2 "Principles governing the use of TCP/IP on the GTS" *read the following sections as follows:

Management of traffic on GTS and Internet

The TCP/IP protocol suite is an enabler to:

simplify interconnectivity between computer systems by allowing several telecommunication technologies to be integrated into a coherent network which may include automatic redundant backup routes,

lower costs by providing standard telecommunication solutions,

build modern applications not just limited to strict, fixed store and forward traffic rules.

However, some care must be taken to address the counter effects of these benefits and in particular, more flexibility in interconnection and in applications comes at the price of less control on where traffic can go. For example, a general purpose link to a GTS cloud network might get flooded with less critical traffic requested by a site that doesn't normally request data through a given link. It may also mean that traffic has trouble reaching its destination because there are several ill-defined routes (through both the GTS and the Internet) to get there.

This care can be achieved through traffic control and segregation, which would address three basic issues:

traffic management (ensuring timely delivery of critical data, controlling limited bandwidth availability in some areas)

security (protecting centres from unwanted threatening events)

routing coherence (ensuring that the overall resulting network can deliver traffic without difficulty to any given location)

To achieve traffic control and segregation, there are several important aspects to consider:

IP addressing: using universally recognizable and coherent network addresses so that all systems only have one unique reference number, which is valid not only within the GTS but across the Internet and any other network which may eventually be interconnected to the GTS

IP network routing rules: using a common set of routing protocols and rules to ensure that any traffic can be consistently sent to its destination without delay or confusion

Zoning of each Centre's network elements: creating different network zones with different security levels, to isolate a Centre's critical elements from publicly available areas and ensuring that data can still flow between zones of differing security levels

Overall topology of interconnection

A general view of the possible interconnectivity between Centers using the GTS and the Internet is given in Appendix 1, as well a typical data flows.

Actual device configuration details to implement these functions in the Cisco family of routers are given in Appendix 2.

Traffic management

Traffic management is an area which is unfortunately not limited to networks, but also involves data management and application configurations. Several groups are therefore involved in this matter.

In general, it can be said that some applications such as file transfer, World Wide Web have potential to place heavy loads on the limited bandwidth circuits that comprise the GTS. Limits need to be applied to ensure that the GTS carries only important traffic such as the real time data and products currently exchanged on the GTS plus data to be carried to fulfil new requirements such as Distributed Data Bases (DDBs), and routinely exchanged large data files such as satellite imagery.

Less important traffic such as ad hoc file exchange, e-mail, general World Wide Web and suchlike should be carried on the Internet. To protect the GTS, the full capabilities of TCP/IP connectivity and information exchange must be restricted. In practical terms, TCP/IP traffic carried on the GTS could be restricted on the basis of

protocol type (e.g. FTP, HTTP, SMTP etc);
originating and destination IP address;
a combination of the above.

If the measures adopted are to be successful, it is necessary that they be:

not confined to a single router brand since it cannot be assumed that all centres will have the same brand of router; and
be reasonably straightforward to configure, so that there is minimum risk that configuration errors or omissions will endanger the GTS.

Security issues and segregation of Internet and GTS traffic

Any Centre which has a TCP/IP based GTS connection <u>and</u> a connection to the Internet, is a potential weak point where the GTS could be exposed to deliberate or inadvertent interference through unwanted traffic or unauthorised connection to GTS hosts.

Centres are strongly encouraged to implement protective barriers such as firewall systems on the connection of their Centre with the Internet. It is important that every practical step is taken to prevent accidental or deliberate use of GTS links or unauthorised access to GTS Centres, by Internet users.

When setting up IP on the GTS, it is vital to ensure that the GTS does NOT become part of the Internet or an unintended transmission path for Internet traffic. Each Centre must consider the GTS and the Internet as two separate networks and ensure that inappropriate flow of traffic from one to the other cannot occur. This will ensure that the GTS is used only for transferring bona fide meteorological data between authorised hosts.

(Figures 2.1 and 2.2 are deleted)

Some basic principles for implementing basic security measures for the GTS are shown in figure A1.2 in Appendix 1. It illustrates in a general way, how a Centre ……

(rest of section unchanged)

…./…

Routing and traffic management

…./….

Registered and private addresses

It is recommended that Centres strive to use officially registered IP addresses issued by the Internet Assigned Numbers Authority (IANA) or the relevant Regional Internet Registry. Official IP addresses are required for all systems which communicate through the Internet. Their use is also strongly recommended for systems which communicate on any inter-organization network, including of course the GTS.

Since it is recognized that official IP addresses sometimes difficult to obtain in certain areas of the world, some compromise options have been developed to mitigate this problem.

Appendix 7 describes IP addresses in further detail and the recommended options for the use of IP addresses over the GTS.

If Centres use private IP addresses on their internal networks, then Network Address Translation (NAT) must be adopted ….

(rest of section unchanged)

…./…

Implementation of GTS links via Internet

CBS has expressed the view that the use of Internet for GTS links can be considered in circumstances where they are cost effective, offer an acceptable level of service and where adequate security measures are implemented. In general, the same principles for routing and security described above, apply where Internet links are used instead of dedicated links. Further details applying to the use of Internet based links, especially related to small GTS Centres, are given in Appendix 4.

Summary of tasks to ensure proper use of IP on the GTS

Use only official IP addresses for external communication on the GTS.

Establish an IP connection with one or more Centres. This connection will be pure IP using PPP as a level 2 protocol on the link, (or a proprietary protocol such as Cisco HDLC by bilateral agreement) or IP over X.25 (RFC 1356). In this case use X.121 addresses as defined in Chapter 3.

Configure dynamic routing with BGP (unless you are a Centre with only one GTS connection and have agreed with your neighbouring Centre to use static routing)

Check the barrier between Internet and the GTS (prevent routing from the Internet to the GTS.)

Filter incoming and outgoing traffic in accordance with the requirements described above.

In* Chapter 3 "Implementation Guidelines" *read the following sections as follows:

Introduction

IP based services on the GTS may be implemented with direct IP connections or by using a mixture of X.25 and IP because of the technical evolution of the GTS described in chapter 1. IP services may be carried over an X.25 network by encapsulating IP packets within X.25 packets. An appropriately configured router at

each GTS Centre carries out this function. Alternatively, where routers of the same brand are used in adjacent Centres, X.25 data may be carried on an IP link using X.25 switching capability of the routers.

….

(rest of section unchanged)

…./…

Addressing for IP over X.25

In order to carry IP traffic over X.25, two globally co-ordinated address schemes are necessary:

an X.25 scheme as described above; and

an IP address scheme to apply to the interface between the router and packet switch to enable the router to encapsulate the IP packets into X.25 packets.

The general arrangement is shown in figure 3.1.

For IP over X.25 to function correctly, it is necessary for the underlying X.25 network to be allocated a single IP network address and for each Centre to have an address within this network for the connection point between its router and its packet switch. Each IP node on the network can be assigned a sequential host address within a single Class C IP address as illustrated in Figure 3.1. The Class C address can provide for 254 Centres to be connected using a subnet mask of 255.255.255.0.

….*(rest of section unchanged)*

Addressing for Direct IP

The preferred connection for the future is to use direct IP links. Centres already using IP over X.25 should consider updating the links to use direct IP. This transition should be considered in the near future. Figure 3.2 below illustrates how a pair of Centres have agreed to implement a direct IP connection using the first available pair of 'host' numbers using the 193.105.178.0 network as an example.

….*(rest of section unchanged)*

Management and allocation of addresses and AS numbers

X.25 addresses

The framework described above allows Centres full autonomy in allocating X.25 numbers. The WMO Secretariat will maintain a current list of X.25 addresses which Centres have allocated for use on the GTS. Centres are requested to notify the Chief of the Information Systems and Services Division of the WWW Department, WMO Secretariat by E-mail or fax of X.25 addresses allocated.

IP addresses

IP addresses should be acquired or agreed on as per the instructions in Appendix 7.

AS numbers

AS numbers for use on the GTS will be co-ordinated and issued by the WMO Secretariat as required. Centres should direct their requests for AS numbers to WMO as described above.

In* Chapter 4 *read the following section as follows:

General file naming conventions

The following file naming convention should be implemented with a transition period not exceeding 2008. The implementation date is subject to review by CBS.

The procedure is based on transmission of file pairs, one file being the information file and the other being the associated metadata file. The concept of file pairs allows the communications function to be implemented independently of data management requirements for structure of metadata, yet provides for the carriage of whatever metadata is required. It is not compulsory to always have a .met file, such as when the information file itself is self-specifying or when a single .met file can describe several information files (for example as in the case of same data type for different times). There is always however a clear relation between the Information File Name and the Metadata File Name, which should only differ from their Extension field and possible wildcards.
File names for new message types (no existing AHL) shall follow the following format. It should be noted that file names for existing message types (existing AHL) can also follow the following format.

The File Name format is a predetermined combination of fields, delimited by the _ (underscore) character except for the last 2 fields, which are delimited by the . (period) character.
Each field can be of variable length, except for the Date/time stamp field which is predetermined.
The order of the fields is mandatory.
The File Name fields are as follows:

pflag_productidentifier_oflag_originator_yyyyMMddhhmmss[_freeformat].type[.compression]

where the mandatory fields are:

pflag is a character or combination of characters indicating how to decode the **productidentifier** field. At this time, the **pflag** field has only the following acceptable value:

Table 4.1 Accepted **pflag** values

pflag	Meaning
T	The **productidentifier** field will be decoded as a standard $T_1T_2A_1A_2$ii data designator (The WMO standard data designators are given in Attachment II-5)
A	The **productidentifier** field will be decoded as a standard Abbreviated Heading, including BBB as appropriate, space characters being discarded, e.g. $T_1T_2A_1A_2$iiCCCCYYGGgg[BBB]
W	WMO Product Identifier
Z	Originating centre's local product identifier

productidentifier is a variable length field containing information that describes the nature of the data in the file. The **productidentifier** field should be decoded according to the **pflag.**

The WMO Product Identifier to be used with **pflag** = W shall be decoded as follows:

<location indicator>,<data designator>,<free description>,<International date-time group>,<BBB modification header>

The WMO Product Identifier is composed of two parts:
the “static part” for description of the product and the "optional part" to define the time stamp and status of the product (correction, amendment).

The WMO Product Identifier is not case sensitive. These two parts are defined as follows:

Static part: <location indicator>,<data designator>,<free description>
<location indicator> defines the producer: Country, organization and the production centre; The country shall be represented by the official ISO 3166 standard 2 letter code. Example: <gb-metoffice-exeter>. Each field shall be separated by “-” symbol.
<data designator> specifies the type of data with reference to the categories and sub-categories defined in the Common Table C-13 of the Manual on Codes, e.g. <SYNOP>, <TAF>, <MODEL>, <RADAR>, <SATELLITE>, etc. When the type of data is a composite type, use the sign ”+” for concatenation.
<free description> is determined by the production centre to characterize the product.

Optional part: [,<International date-time group>,<BBB modification header>]
<International date-time group> is a YYYYMMDDHHMMSS time stamp of the product, full format without substitution characters (only decimal digits). This field is optional because it can be recovered from the file name field: yyyyMMddhhmmss
<BBB modification header> is a complementary group with a similar purpose as the current BBB group of AHL

Note: in order to facilitate the identification of each field of the product identifier, the static part, as well as the optional part if used, shall comprise two symbols “,” separating the fields. Each field shall not contain any symbol “,”. If a field is empty, no character shall be inserted between the relevant field delimiters “_” or “,”.

oflag is a character or combination of characters indicating how to decode the **originator** field. At this time, the **oflag** field has only the following acceptable value:

Table 4.2 Accepted **oflag** values

oflag	Meaning
C	The **originator** field will be decoded as a standard CCCC country code

originator is a variable length field containing information that states where the file originated from. The **originator** field should be decoded according to the **oflag**

yyyyMMddhhmmss is a fixed length date and time stamp field. The interpretation of this field should be in accordance with the standard rules set for specific data description and types. Therefore it may have various significance such as date of creation or the file, or date of collection of data. If a particular date and time stamp field is not specified, it should be replaced by a `-` (minus) character. For example: ------311500-- represents a stamp that specifies only the day (31st), hours (15) and minutes (00). If there are no rules for a specific data type, this field should represent the date and time of creation of the file by the originator.

Type is a variable length field that describes the general format type of the file. Although this information could be considered somewhat redundant to the **productidentifier** field, it is kept as such for industry accepted standard compatibility. It should be noted that the delimiter before the **type** field is a . (period). This is to help parse the file name for fields, since the **freeformat** field could make use of further _ (underscore) to delimit subfields.

Table 4.3 Accepted **type** values

type	Meaning
met	The file is a metadata file pair which describes the content and format of the corresponding information file with the same name
tif	TIFF file
gif	GIF file
png	PNG file
ps	Postscript file
mpg	MPEG file
jpg	JPEG file
txt	text file
htm	HTML file
bin	a file containing data encoded in a WMO binary code form such as GRIB or BUFR
doc	a Microsoft Word file
wpd	a Corel WordPerfect file

And the non mandatory fields are:

freeformat is a variable length field containing further descriptors as required by a given originator. This field can be further divided in sub-fields. Originating countries should strive to make their **freeformat** descriptions available to others.

compression is a field that specifies if the file uses industry standard compression techniques

Table 4.4 Accepted **compression** values

compression	Meaning
Z	The file has been compressed using the Unix COMPRESS technique
zip	The file has been compressed using the PKWare zip technique
gz	The file has been compressed using the Unix gzip technique
bz2	The file has been compressed using the Unix bzip2 technique

Maximum file name length: Although no maximum length is specified for the entire file name, the mandatory fields shall not exceed 128 characters (including all delimiters) to allow processing by all international systems.

Character set: The filenames shall be composed of any combination of the standard character set (ITU-T Rec. X.4) with the exceptions noted in Table 4.5. Case insensitivity shall be used as it is widely accepted and implemented in the industry (for example email addresses and URLs). However, it is recommended to use the "canonical form" of file names when files are being processed in a system. In this manner it would be expected that:

File names be saved in their original form as received (with any combination of upper-lower case characters or any character set)

Files would be saved with lower case characters only for internal processing, comparison, name searches, etc.

Files would be retransmitted with the original saved name to preserve character set and the upper lower case differences.

This keeps the benefits of readability of upper lower case throughout the systems, but provides case independence for processing and reference.

Table 4.5 Symbols for filenames

Symbol	Allowed	Meaning
_	yes	The underscore symbol is used has a delimiter symbol. To be used only as a delimiter of fields. The underscore is also accepted in the **freeformat** field, but not in other fields.
-	yes	The minus symbol shall be used only as a field delimiter inside the “location indicator” and “free description” fields of the WMO Product Identifier in the **productidentifier** field. For example, in the case of location indicator: gb-metoffice-exeter. This symbol shall not appear in the "data designator" field.
+	yes	The plus symbol shall be used to concatenate several words in a field of the WMO Product Identifier in the **productidentifier** field. For example, in the “data designator” field: TEMP+MOBIL or CLIMAT+TEMP+SHIP
.	yes	The period symbol is used has a delimiter symbol. To be used only before the **type** and **compression** fields.
/	no	Forward stroke often has special meaning for the full path specification of a filename in some operating systems
\	no	Backward stroke often has special meaning for the full path specification of a filename in some operating systems
>	no	Greater than symbol shall not be used since it often represents special file manipulation in some operating systems
<	no	Less than symbol shall not be used since it often represents special file manipulation in some operating systems
|	no	Vertical bar (pipe) symbol shall not be used since it often represents special file manipulation in some operating systems
?	no	Question mark symbol shall not be used
‘	no	Single quote shall not be used.
“	no	double quotes shall not be used
*	no	The star symbol is often used for wildcard specification in procedures that process filenames.
Space	no	The space symbol shall not be used
,	yes	The comma symbol shall be used as a field delimiter in the WMO Product Identifier of the **productidentifier** field. For example, in the static part: <location indicator>,<data designator>,<free description>. The comma symbol can be also used in the **freeformat** field
A-Z a-z 0-9	yes	

The structure of the '.met' file, related to the WMO Metadata standard, is not defined in this guide.

Examples

A possible imagery file (Sig Weather Chart) that would have originated from the USA:

T_PGBE07_C_KWBC_20020610180000_D241_SIG_WEATHER_250-600_VT_06Z.tif

A possible model output file from France:

A_HPWZ89LFPW131200RRA_C_LFPW_20020913160300.bin

A possible synoptic surface observations file from France:

W_fr-meteofrance-Toulouse,SYNOP,MAIN+HOURS,,RRA_C_LFPW_20060913030000.txt

A possible model output file from France:

W_ fr-meteofrance-toulouse,GRIB,ARPEGE-75N10N-60W65E_C_LFPW_200610000000.bin

A possible image from Australia:

Z_IDN60000_C_AMMC_20020617000000.gif

Note that this shows that the date and time stamp is to be interpreted to be 00 hours, 00 minutes and 00 seconds.

A possible compressed TOVS satellite data file from the United Kingdom:

Z_LWDA_C_EGRR_20020617000000_LWDA16_0000.bin.Z

A possible image (radar) from Canada:

T_SDCN50_C_CWAO_200204201530--_WKR_ECHOTOP,2-0,100M,AGL,78,N.gif

A possible single-record GRIB file from Canada:

Z__C_CWAO_2002032812----_CMC_reg_TMP_ISBL_500_ps60km_2002032812_P036.bin

A possible multiple record batch file from China:

Z_SM_C_BABJ_20020520101502.txt

In* Appendices, *insert a new Appendix 1, renumber Appendices 1 to 5 into 2 to 6 (including references) and insert a new Appendix 7 as follows:

1. High Level TCP/IP Topology and TCP/IP Data Flows

The following diagrams show a high level view of the topology of a simple Centre and the main data flows regarding GTS and Internet telecommunication. More detailed X.25 over IP configurations can be found in the following appendices.

Figure A1.1 – General interconnectivity between Centres

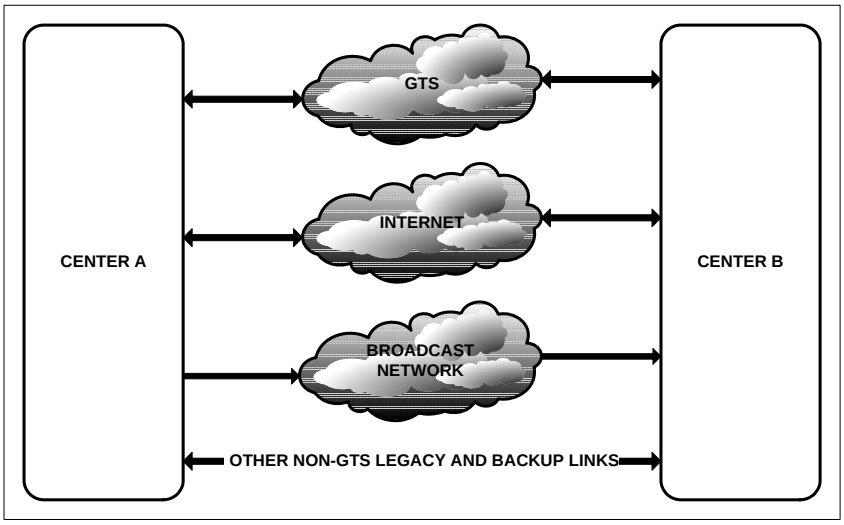

Figure A1.2 – Topology of TCP/IP network in a simple Centre

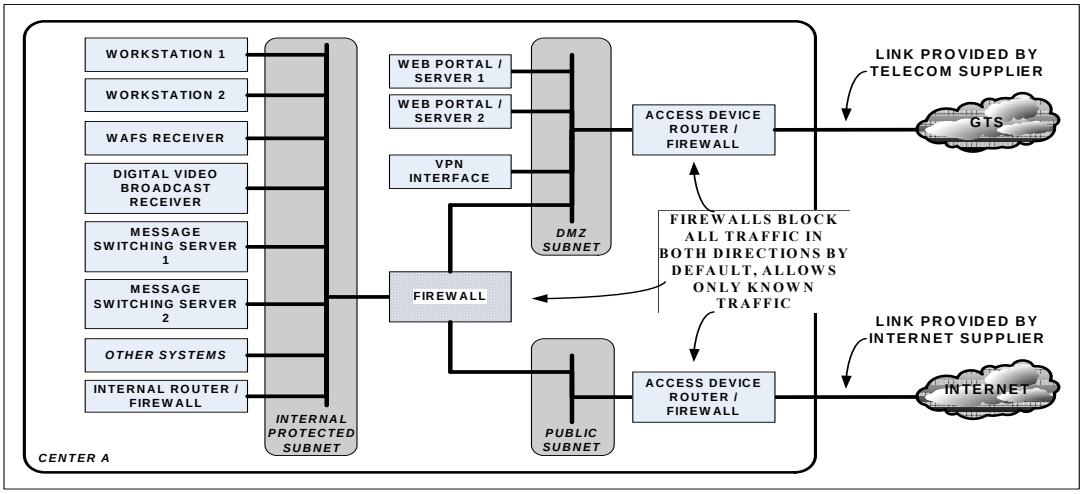

Figure A1.3 – Data flow of traffic over the GTS – IP only

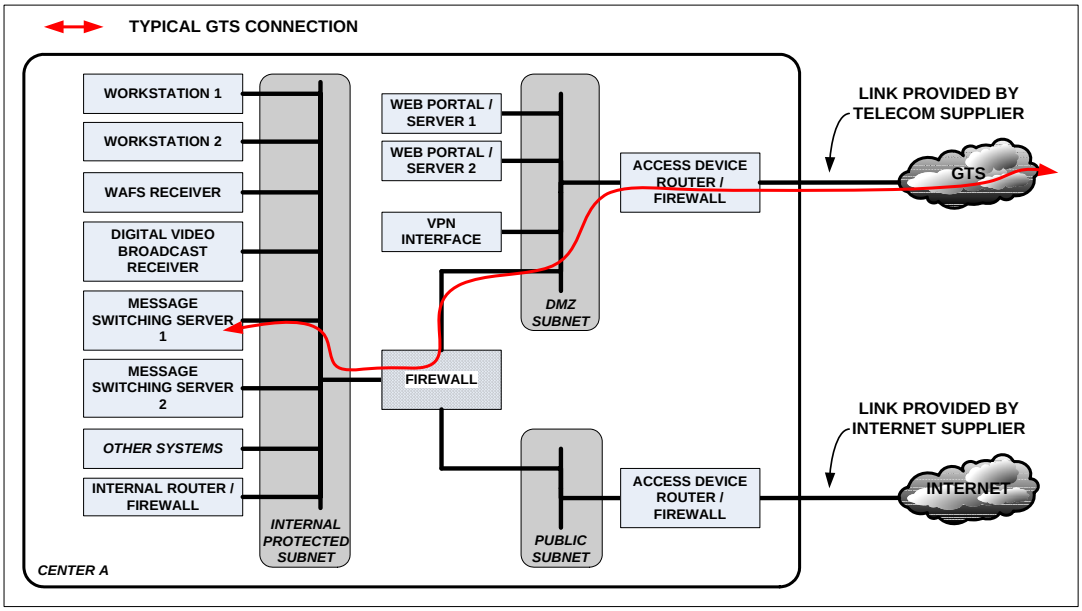

Figure A1.4 – Data flow of traffic over the GTS – X.25 over IP

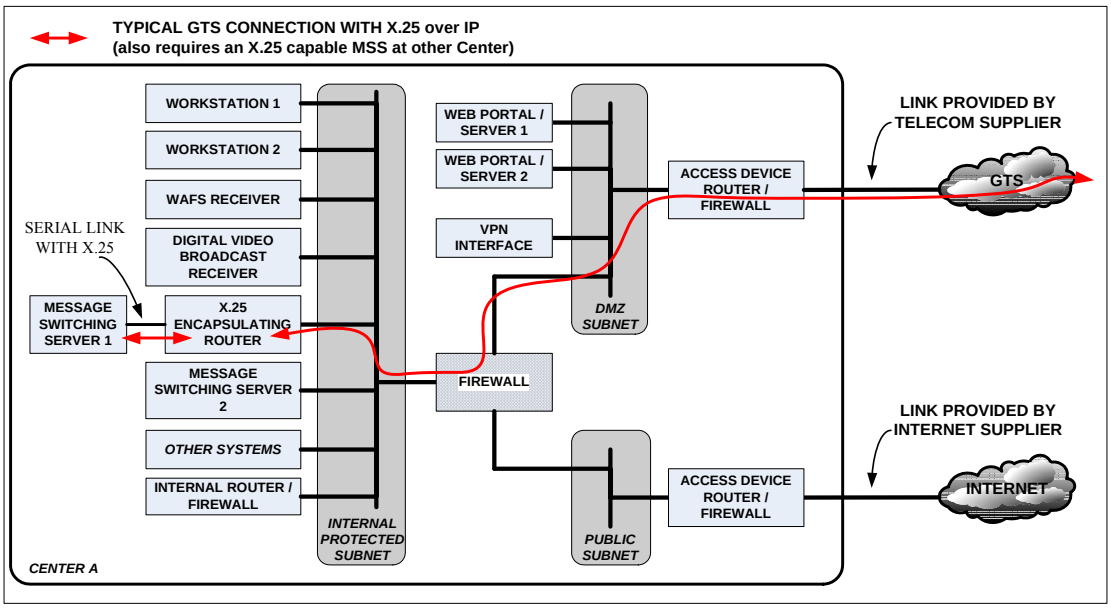

Figure A1.5 – Data flow of traffic using VPN over the Internet

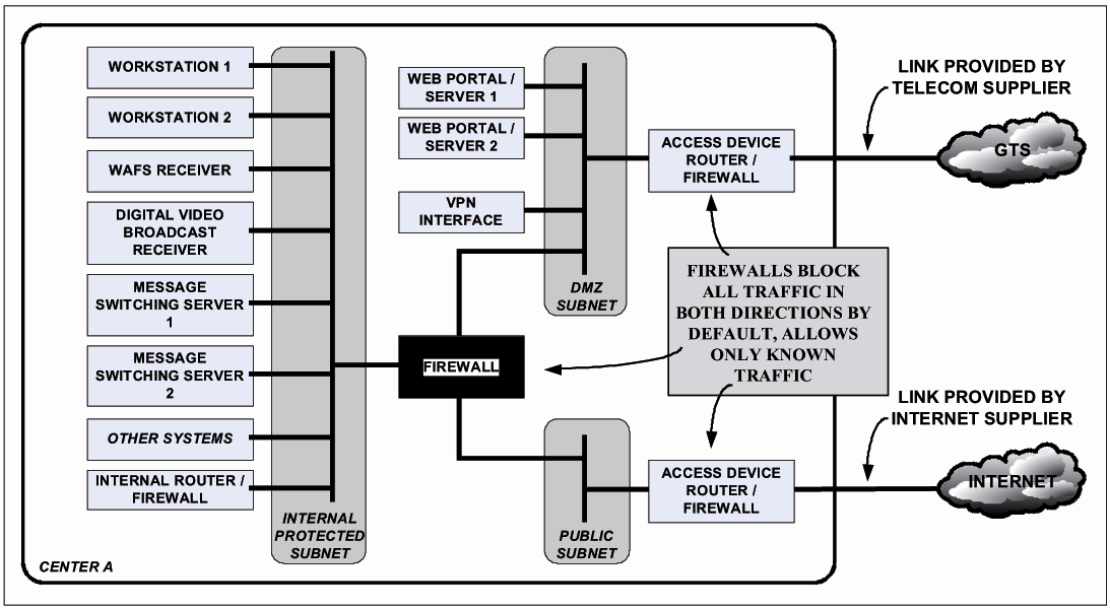

7. IP addresses for use on the GTS

Introduction

The current "Recommended practices and procedures for the implementation, use and application of the Transmission Control Protocol/Internet Protocol (TCP/IP) on the GTS" as given in the Manual on the GTS, Volume II, Attachment II.15 (also known as "Guide on Use of TCP/IP on the GTS") describes guidelines and a procedure for assigning IP addresses to GTS links which is no longer adequate. In particular, it states that a number of official class C IP addresses were available through the WMO Secretariat to be assigned for GTS links. These sets of IP addresses are no longer officially available, as a consequence of a strict application of Internet standards (RFCs) by Internet Authorities and Services Providers, and unfortunately cannot be used on the GTS, as

they may now be assigned to other organizations on the Internet. The WMO Secretariat has therefore been instructed to discontinue the assignment of such IP addresses.

The Expert Team on Communication Techniques and Structure (ET-CTS) has been tasked to provide alternate solutions to solve this issue.

This document is a provisional description of the available options and related guidance to mitigate this problem and assist Members in their implementation. The included guidelines only concern the IP addressing. They do not change the existing recommendations on how IP relates to X.25 or other IP functionality.
The ET-CTS will proceed with developing the proposed amendments to Attachment II.15 to reflect the new recommended practices for allocating IP addresses.

Who can provide official IP addresses?

In order to build a network that interconnects many organizations from various countries in the world, it is essential to maintain a standard in the addressing scheme, and to maintain uniqueness in the allocation of addresses to the various organizations. The Internet community has identified this basic principle and created some official bodies to coordinate the distribution of official IP addresses. Today, this responsibility belongs to the Internet Assigned Numbers Authority (IANA), and its regional delegates, the relevant Regional Internet Registries:

AfriNIC (African Network Information Centre) – Africa region

APNIC (Asia Pacific Network Information Centre) – Asia Pacific region

ARIN (American Registry for Internet Numbers) – Americas and Southern Africa

LACNIC (Regional Latin-American and Caribbean IP Address Registry) – Latin America and some Caribbean islands

RIPE NCC (Réseaux IP Européens Network Coordination Centre) – Europe and surrounding areas

These organizations further delegate the allocation of addresses to their regional Internet and telecommunications suppliers through national Internet registries.

In this scheme, it is not the WMO's business to allocate IP addresses. Since the GTS is not built as a unique network under the complete authority of a single organization, the allocation of addresses must therefore go through the respective national Internet registry or the appropriate Regional Internet Registry.

However, several countries now face the issue of the restriction of allocation of IP version 4 (IPv4) addresses and may have difficulty obtaining official addresses. This problem is not an easy one to solve in the short term and provisional measures may have to be taken to allow the further development of the GTS. The following guidelines explain how to interconnect networks with and without the use of official IP addresses.

Connecting networks with official IP addresses

Using official IP addresses assigned directly to an organization (e.g. the NMS)

This remains the preferred option if it is feasible. It is basically the main procedure described in the existing "Guide on Use of TCP/IP on the GTS". It follows all the Internet rules and allows an organization to build a coherent network with interconnections to the Internet, GTS and possibly other partner organizations. It is also the easiest configuration to maintain.

In interconnecting two countries to form a GTS link, the two National Meteorological Services should decide which one actually provides the address to the interconnecting link. The decision remains one of practicality for the countries. There are no general rules that would favour one set of addresses over another one.

Using official IP addresses provided by a telecommunications supplier

This option is very similar to the previous one. The addresses supplied would be official and all the rules would of course be followed.

It may require that a common telecommunications supplier be used between the two interconnecting organizations.

This option however has the draw back that a change in telecommunication suppliers may require a change in IP addressing as original incumbent reclaims "his" addresses. Each organization should plan for this possibility ahead of time and evaluate its impact on future operations. If these addresses are only used for link purposes and not for an organization's internal purposes, then this draw back may be of minimal impact.

Using IP version 6 (IPv6) addresses

The new IP version 6 (IPv6) protocol standard was designed in great part to address the shortage of IPv4 addresses. Although the IPv6 protocol is available and supported in many telecommunication equipments available today, its implementation requires much planning. In particular, IPv4 and IPv6 are not compatible without the use of gateways and there are several operational tools still missing to make IPv6 usable for the GTS at this time. Converting to IPv6 would be a major task that can not be imposed on our members until the industry is ready to take this step as a whole.

This option is therefore not available today. It is only mentioned here for completeness and will be further studied over the next years.

Connecting networks without official IP addresses

Using the "ip unnumbered" feature

Several network equipment suppliers (Cisco, 3Com, Juniper) have now introduced a feature in their configurations which allows the implementation of links without the need for allocation of IP addresses. This feature is usually called the "ip unnumbered" feature. For example, Cisco provides a document on "Understanding and Configuring the ip unnumbered Command" (see reference section for details).

This feature is not a standard IP protocol feature, so it requires compatible equipment at both ends of the link to work (most frequent situation anyhow).

Routing between the two networks can be accomplished by binding the unnumbered interface to another existing interface in the router (either a real LAN or virtual loopback interface). The use of this feature may introduce limitations in routing flexibility.

Using RFC1918 – Addresses for private internets

The Internet Engineering Task Force (IETF) document "RFC1918 – Addresses for private internets" describes a set of addresses reserved for use by organizations *for sole intra-enterprise communications, without any intention to ever directly connect to other enterprises or the Internet itself.*

Therefore the use of these addresses does not require official registration. The main purpose of this scheme is to allow a big organization to make use of a larger address space for its internal operations. As soon as the organization needs to exchange with others, a gateway must be traversed to enter an area of officially assigned addresses to maintain overall network coherence. This gateway must translate the internal RFC1918 addresses into official external IP addresses, which must be obtained via the official bodies. The function (usually performed by a router or firewall) that does this translation is called "Network Address Translation" (NAT). This address translation will also have the effect of concentrating several RFC1918 internal addresses into a very small number of official addresses, thus preserving official address space.

Although this scheme might seem attractive at first for our issue, the GTS is not the network of a single enterprise. At this time, any number of the WMO Member NMHSs and related organizations may already make use of the RFC1918 in their own networks, which may result in conflicting address allocations if the networks interconnect. A recommendation from WMO for the use of RFC1918 is almost an impossible task, as the NMHSs may already be under guidelines of their own government, which might conflict with a directive of WMO. However, interconnecting countries may find adequate address space within RFC1918 in a bilateral agreement.

This option is therefore feasible as long as the following points are carefully considered, planned, maintained and monitored:

Great care should be taken in selecting a proper RFC1918 set of addresses for links between organizations. It is important that the selected addresses are not already in use by any of the involved organizations.

Great care should be taken to ensure that routing configurations do not allow the leaking of RFC1918 addresses into other organization's network or worse, into the Internet.

Although this solution will work quite satisfactorily between a few countries, it cannot be expanded to many directly interconnected countries, as the choice of RFC1918 addresses will get more and more complicated.

The IANA has reserved the following blocks in RFC1918.

10.0.0.0	-	10.255.255.255	(10/8 prefix)
172.16.0.0	-	172.31.255.255	(172.16/12 prefix)
192.168.0.0	-	192.168.255.255	(192.168/16 prefix)

Since many organizations already use the 10.0.0.0/8 block internally and since the 192.168.0.0/16 block is often used as default addresses by several equipment manufacturers, it is recommended that GTS links be used out of the 172.16.0.0/12 block only if possible.

Furthermore, it is also recommended that the 172.16.0.0/12 be subnetted in a way to maximize the usage of the address space. To that effect, GTS links can be subnetted to /30 bits. This allows 4 hosts per link (leaving the hosts addresses 1 and 2 available to designate the 2 ends of a given link).

NMHS that consider using the RFC1918 addresses should consult with all potential NMHS with whom they

might establish a link in order to coordinate and plan the use of these subnets ahead of time. In the case of address conflicts, other address schemes within RFC1918 might be used by bilateral agreement. The ET-CTS would like to be informed of such issues if they arise to further develop this recommendation.

The use of RFC1918 addresses should not introduce security problems as long as the above points are well managed.

Recommendation

All the options described above can be used in the GTS. The order of preference is as follows:

1- Using official IP addresses assigned directly to an organization, e.g. the NMHS (preferred)
2- Using official IP addresses provided by a telecommunications supplier
3- Using the "ip unnumbered" feature
4- Using RFC1918 – Addresses for private internets

The use of IPv6 on the GTS is not recommended at this time.

It should be understood that all options that do not require official IP addresses are workarounds to mitigate the shortage of addresses and must be used with care.

Configuration Examples

Option 1 – Using existing organization (NMHS) official IP addresses or Option 2 – Using Telecommunication Supplier official IP addresses

This is the standard way to configure an interface between two networks.

Router A:

```
!
interface Ethernet0
  ip address 131.238.17.11 255.255.255.0
!
interface Serial0
  description 64Kbps leased line to router B
  ip address 131.238.18.01 255.255.255.252
  encapsulation ppp
  bandwidth 64
!
ip route 142.47.43.0 255.255.255.0    131.238.18.2
!
```

Router B:

```
!
interface Ethernet0
  ip address 142.47.43.201 255.255.255.0
!
```

```
interface Serial0
  description 64Kbps leased line to router A
  ip address 131.238.18.02 255.255.255.252
  encapsulation ppp
  bandwidth 64
!
ip route 131.238.17.0 255.255.255.0    131.238.18.1
```

Insert the following new section in Appendix 4 (former Appendix 3)

Virtual Private Network – secure GTS connections over the Internet

A **virtual private network** (**VPN**) is a private network implementation among organizations to communicate over a publicly accessible network. VPN message traffic can be carried over the Internet on top of the standard TCP/IP protocols. **Secure VPNs** use cryptographic tunneling protocols to provide the sender authentication, message integrity and confidentiality to achieve privacy. This is considered suitable for use for the transmission and exchange of meteorological data among centres.

The most common Secure VPN protocol is **IPSec**. IPSec is designed to provide interoperable high quality, cryptographically-based security for IP. The set of security services offered includes access control, connectionless integrity, data origin authentication, protection against replays, as well as confidentiality.

IPSec is an end-to-end security protocol: all the functionality and intelligence of the VPN connection reside at the end points, either in a gateway or in the end-host. Through IPSec, it is possible to establish a tunnel between two gateways. An IPSec gateway would typically consist of an access router, a firewall or a VPN gateway on which the IPSec protocol is implemented. The IPSec gateway locates between the user's private network and the carrier's shared network.

IPSec tunnels are established dynamically and released automatically when they are not in use. To establish an IPSec tunnel, two gateways must authenticate themselves and define which security algorithms and keys they will use for the tunnel. The entire original IP packet is encrypted and wrapped inside IPSec authentication and encryption headers. Figure 5 shows an implementation of a VPN connection using IPSec between two GTS centres.

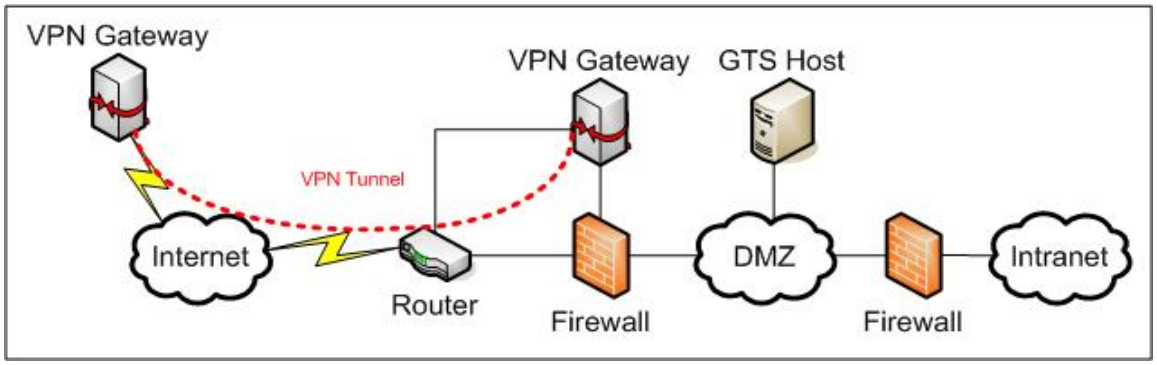

Figure 5 - The use of VPN over the Internet to connect two GTS centres.

The VPN gateway is connected to a firewall and a router. The VPN gateway can establish a VPN tunnel with other

VPN gateways through the interface of the router. The flow of traffic into the internal network will be through the firewall and will be controlled by an access list defined by the user.

IPSec makes use of the Authentication Header (AH) and the Encapsulation Security Payload (ESP) to achieve data integrity and confidentiality.

The most common encryption algorithm used in ESP is Triple Data Encryption Standard (3DES) and Advanced Encryption Standard (AES). They have encryption key sizes from 128 bits to 256 bits, providing sufficient protection for data traffic along the trunk.

Further details on VPN implementation can be found in the Guide on Virtual Private Network (VPN) via the Internet between GTS centres. This Guide is available on the WMO web page at

http://www.wmo.int/web/www/manuals.html

建议 4（CBS-Ext.(06)）

《电码手册》修正案，第 I.2 卷：FM XIII GRIB 2、FM XIII BUFR 和 FM XIII CREX

基本系统委员会，

注意到：

(1) 资料表示和电码专家组的会议报告（2005 年 12 月 5-8 日，阿曼，马斯喀特），

(2) 资料表示和电码专家组和表驱动电码格式过渡协调组联席会议的报告（2006 年 5 月 8-12 日，蒙特利尔 ICAO），

(3) ICT ISS 报告（2006 年 9 月 18-22 日，日内瓦），

考虑到各种需要：

(1) GRIB 第 2 版：

(a)THORPEX TIGGE 外场、火险探测和晴空辐射卫星资料、紫外线指数场和其他降水场（GRIB 第 2 版）；

(b)用于无损失 IEEE 浮标数据打包和简式数据打包，并设立一个新系统，界定业务前诸表的主表版号；

(c)新参数和规定，以保证参数定义的正交结构（GRIB 第 2 版）。

(2) BUFR 和 CREX：

(a) 增加通用序列，用于 SYNOP 模板（包括区域的实际需要）、SHIP 和浮标观测、CLIMAT、CLIMAT SHIP、CLIMAT TEMP 和 CLIMAT TEMP SHIP 资料；

(b) 新的卫星资料特别是欧洲极轨卫星新的资料，包括用 MHS、IASI 和 ASCAT 仪器获取的资料；

(c) 对用 BURF 报告卫星和雷达（SAREP 和 RADOB 资料）热带气旋观测资料以及报告 TRACKOB 船舶资料；

(d) 用 SIGWX 报来报告湍流的延伸幅度并用 BUFR 来传输 SIGMET 的描述符；

(e) 对某些 BUFR 规定的解释；

(f) 对测量 SST 的船舶用温度传感器的高度提出了增加内容，对名义值的表示和廓线浮标的温度和盐度廓线提出了增补内容。

建议通过下列修正案，以便从 2007 年 11 月 7 日起投入业务使用：

(1) 对 FM 92-XIII GRIB 的增加内容，见本建议案的附录 1 ；

(2) 对 FM 94-XIII BUFR 和 FM 95-XIII CREX 增加的内容，见本建议案附录 2；

请求秘书长安排将这些修正案纳入《电码手册》。

建议 4（CBS-Ext.(06)）的附录 1

ADDITIONS TO FM 92-XIII GRIB
For Fire Detection from Space:

Code Table 4.2, Product Discipline 3 – Space products, Parameter category 0: image format products

Add:	9, Parameter = Fire detection indicator, Units = Code table (4.223)
Change:	9 – 191, Parameter = Reserved
to:	10 – 191, Parameter = Reserved

And add a new Code Table, 4.223 as follows:

Code Table 4.223 - Fire detection indicator

Code figure	Meaning
0	No fire detected
1	Possible fire detected
2	Probable fire detected
3	Missing

For Clear Sky Reflectance:

Code Table 4.2, Product Discipline 3 – Space products, Parameter category 1: quantitative products

Add:	Number 6, Parameter = Number of pixels used, Units = numeric
Add:	Number 7, Parameter = Solar zenith angle, Units = degrees
Add:	Number 8, Parameter = Relative azimuth angle, Units = degrees
Add:	Number 9, Parameter = Reflectance in 0.6 micron channel, Units = %
Add:	Number 10, Parameter = Reflectance in 0.8 micron channel, Units = %
Add:	Number 11, Parameter = Reflectance in 1.6 micron channel, Units = %
Add:	Number 12, Parameter = Reflectance in 3.9 micron channel, Units = %
Change:	Number 6 – 191, Parameter = Reserved
to:	Number 13 – 191, Parameter = Reserved

Add in Table 1.3 on Production Status of Data:

Number	Meaning
======	======
4	THORPEX Interactive Grand Global Ensemble (TIGGE)

5THORPEX Interactive Grand Global Ensemble (TIGGE) test

Add in Code Table 4.2, Discipline 0 – category 1 - moisture

51 Total column water kg m^{-2} Vertically integrated total water (vapour + cloud water/ice)

Amendments needed:

In octets 6-7 of Section 1:

Change Common Code Table reference to C-11:

6-7 Identification of originating/generating centre (see Common Code Table C-11)
In Common Code Table C5 – Satellite identifier
An additional column for GRIB edition 2 should be added with 65535 for the missing value and other currently unused entries reserved for future use.

Additions to GRIB Edition 2 Code table 5.0

4	Grid point data – IEEE floating point data
5-39	Reserved
52-60	Reserved
61	Grid point data - simple packing with logarithm pre-processing
62-49151	Reserved
49152-65534	Reserved for local use
65535	Missing

For Packing:

Note to be added at start of template definitions used in sections 5 and 7.

Note: For most templates, details of the packing process are described in regulation 92.9.4

For UV index add new parameters as follows:

In Code table 4.2, Product discipline 0 - Meteorological products, parameter category 4: short-wave radiation, add:

Number	Parameter	Units
50	UV index *(under clear sky)	Numeric
51	UV index *	Numeric

Add:

Note:

The Global Solar UVI is formulated using the International Commission on Illumination (CIE) reference action spectrum for UV-induced erythema on the human skin (ISO 17166:1999/CIE S 007/E-1998). It is a measure of the UV radiation that is relevant to and defined for a horizontal surface. The UVI is a unitless quantity defined by the formula:

$$I_{UV} = k_{er} \cdot \int_{250\,nm}^{400\,nm} E_{\lambda} \cdot s_{er}(\lambda) d\lambda$$

where $\mathbf{E_{\lambda}}$ is the solar spectral irradiance expressed in W·/ (m^2·nanometer) at wavelength $\boldsymbol{\lambda}$ and $\mathbf{d\lambda}$ is the wavelength interval used in the summation. $\mathbf{S_{er}\lambda}$ is the erythema reference action spectrum, and $\mathbf{k_{er}}$ is a constant equal to 40 m^2 / W.

Add a note to Code table 3.11:

Note:

For entry 1, it should be noted that depending on values of extreme (first/last) coordinates, and regardless of bit-map, effective number of points per row may be less than the number of points on the current circle.

DUPLICATE NOTE (3) WITHIN GRID DEFINITION TEMPLATE (GDT) 3.0 FOR ALL OTHER GDTS

NOTE (3) WITHIN GRID DEFINITION TEMPLATE (GDT) 3.0 SHOULD BE DUPLICATED FOR ALL OTHER GDTS WHICH MIGHT BE ASSOCIATED TO QUASI-REGULAR GRIDS. IT IS THEN RECOMMENDED TO:

- duplicate Note (3) of GDT 3.0 into GDT 3.40 (by adding there a Note (4))
- insert a “pointer” to Note (3) of GDT 3.0 into GDTs 3.[1 to 3]
- do the same to new Note (4) of GDT 3.40 into GDTs 3.[41 to 43]

For template GDT 3.0:

Also add to Octet list:

73-nn List of number of points along each meridian or parallel (These octets are only present for quasi-regular grids as described in notes 2 and 3)

Similar changes are needed for Grid definition templates 3.1, 3.2, 3.3, 3.10, 3.40, 3.41, 3.42, 3.43.

Add entries in Table 4.2, discipline 0, category 1: moisture

47	Large scale water precipitation (non-convective)	kg m^{-2}
48	Convective water precipitation	kg m^{-2}
49	Total water precipitation	kg m^{-2}

50　　Total snow precipitation　　kg m^{-2}

Add:

Note: Entries 9 and 10 include all phases of precipitation.

Add new templates:

Data representation template 5.4 Grid point data – IEEE floating point data

---

Octet No.	Content
12	Precision (See Code table 5.7)

Data template 7.4 Grid point data - IEEE floating point data

Octet No.	Content
6-nn	Binary data values (See Code table 5.1)

Data representation template 5.61: Grid point data - simple packing with logarithm pre-processing

Preliminary Note: This template is experimental, was not validated at the time of publication and should be used only for bi-lateral previously agreed tests.

Octet Number(s)	Contents
12-15	Reference value (R) (IEEE 32-bit floating-point value)
16-17	Binary scale factor (E)
18-19	Decimal scale factor (D)
20	Number of bits used for each packed value
21-24	Pre-processing parameter (B) (IEEE 32- bit floating-point value)

Notes:

(1) This template is appropriately designed for data sets with all non-negative values and a wide variability range (more then 5 orders of magnitude). It must not be used for data sets with negative values or smaller variability range.

(2) A logarithm pre-processing algorithm is used to fit the variability range into one or two order of magnitudes before using the simple packing algorithm. It requires a parameter (B) to assure that all values passed to the logarithm function are positive. Thus scaled values are $Z=\log(Y+B)$, where Y are the original values, log is the natural logarithm function and B is chosen so that $Y+B>0$.

(3) Best practice follows for choosing the B pre-processing parameter.

   a. If the data set minimum value is positive, B can be safely put to zero.

   b. If the data set minimum is zero, all values must be scaled to become greater than zero and B can be equal to the minimum positive value in the data set.

(4) **Data shall be packed using Data template 7.**

Modifications to Code table 3.11

Code table 3.11 - Interpretation of list of numbers at end of section 3

Code figure	Meaning
0	There is no appended list
1	Numbers define number of points corresponding to full coordinate circles (i.e. parallels), coordinate values on each circle are multiple of the circle mesh, and extreme coordinate values given in grid definition (i.e. extreme longitudes) may not be reached in all rows
2	Numbers define number of points corresponding to coordinate lines delimited by extreme coordinate values given in grid definition (i.e. extreme longitudes) which are present in each row
3	Numbers define the actual latitudes for each row in the grid. The list of numbers are integer values of the valid latitudes in microdegrees (scaled by 10^6) or in unit equal to the ratio of the basic angle and the subdivisions number for each row, in the same order as specified in the "scanning mode flag" (bit no. 2). (see Note 1)
4-254	Reserved
255	Missing

Note:

The value for the constant direction increment Di (or Dx) in the accompanying Grid Definition Template should be set to all ones (missing).

Changes implied by additional entry in Code Table 3.11:

- contents definition of octets 11 and 12 of Section 3 specification: delete “defining number of points”
- Notes (2) to (4) of Section 3 to modify as follows:

1. *(unchanged)*

2. An optional list of numbers may be used to document a quasi-regular grid In such a case, octet 11 is non zero, and gives the number of octets used per item in the list. For all other cases, such as regular grids, octets 11 and 12 are zero and no list is appended to the Grid Definition Template.

3. If a list of numbers is present, it is appended at the end of Grid Definition Template (or directly after Grid Definition Template Number if template is missing), the length of the list is given by the grid definition. When the Grid Definition Template is present, the length is given according to bit 3 of scanning mode flag octet (length is Nj or Ny for flag value 0). List ordering is implied by data scanning.

4. Depending on code value given in octet 12, the list of numbers either:
   - corresponds to the coordinate lines as given in the grid definition, or
   - corresponds to a full circle, or
   - does not apply

- Notes (2) and (3) of GDT 3.0 to read as follows:

  (2) For data on a quasi-regular grid where all the rows or columns do not necessarily have the same number of grid points, either Ni (Octets 31-34) or Nj (Octets 35-38) and the corresponding Di (Octets 64-67) or Dj (Octets 68-71) shall be coded with all bits set to 1 (missing). **The actual number of points along each parallel or meridian shall be coded in the octets immediately following the Grid Definition Template (Octets [xx+1] – nn), as described in the description of the Grid Definition Section.**

  (3) A quasi-regular grid is only defined for appropriate grid scanning modes. Either rows or columns, but not both simultaneously, may have variable numbers of points or variable spacing. **The first point in each row (column) shall be positioned at the meridian (parallel) indicated by Octets 47-54. The grid points shall be evenly spaced in latitude (longitude).**

MODIFICATIONS TO CODE TABLE 1.0:

Code Table 1.0: GRIB Master Tables Version Number

0	Experimental
1	Version implemented on 7 November 2001
2	Version implemented on 4 November 2003
3	Version implemented on 2 November 2005
4	Version implemented on 7 November 2007
5	Pre-operational to be implemented by next amendment
6 -254	Future version
255	Missing value

TO MAINTAIN ORTHOGONAL STRUCTURE OF GRIB EDITION 2*:*

Add new regulation:

92.6.2 To maintain orthogonal structure of GRIB Edition 2, parameter names in the Code table 4.2 should not contain surface type and statistical process as part of the name.

1) Add new parameters

DISCIPLINE	CATEGORY	PARAMETER NUMBER	PROPOSED NAME OF THE PARAMETER CLASS	UNIT
0	4	9	NET SHORT WAVE RADIATION FLUX	W M^{-2}
0	5	5	NET LONG WAVE RADIATION FLUX	W M^{-2}

2) Deprecate:

NAME OF THE PARAMETER	DISCIPLINE	CATEGORY	PARAMETER NUMBER

SHORT WAVE RADIATION FLUX*	0	4	2
LONG WAVE RADIATION FLUX*	0	5	2

NOTE: * PARAMETER DEPRECATED - SEE REGULATION 92.6.2 AND USE ANOTHER PARAMETER INSTEAD.

3) Add parameters:

NAME	**UNIT**	**DISCIPLINE**	**CATEGORY**	**PROPOSED PARAMETER NUMBER**
SOIL MOISTURE	KG M^{-3}	2	0	22
CLOUD COVER	%	0	6	22

4) Parameters, which contain statistical process:

Deprecate parameters:

PARAMETER TO BE DEPRECATED	**DISCIPLINE**	**CATEGORY**	**PARAMETER NUMBER**
MAXIMUM TEMPERATURE*	0	0	4
MINIMUM TEMPERATURE*	0	0	5
MINIMUM DEW POINT DEPRESSION*	0	0	14
MAXIMUM RELATIVE HUMIDITY*	0	1	27
MAXIMUM ABSOLUTE HUMIDITY*	0	1	28
MAXIMUM WIND SPEED*	0	2	21
TIME-INTEGRATED AIR CONCENTRATION OF CAESIUM POLLUTANT*	0	18	6
TIME-INTEGRATED AIR CONCENTRATION OF IODINE POLLUTANT*	0	18	7
TIME-INTEGRATED AIR CONCENTRATION OF RADIOACTIVE POLLUTANT*	0	18	8

NOTE: * PARAMETER DEPRECATED - SEE REGULATION 92.6.2 AND USE ANOTHER PARAMETER INSTEAD.

5) Deprecate parameters, which contain the surface type

PARAMETER TO BE DEPRECATED	**DISCIPLINE**	**CATEGORY**	**PARAMETER NUMBER**
NET SHORT WAVE RADIATION	0	4	0

FLUX (SURFACE)*			
NET SHORT WAVE RADIATION FLUX (TOP OF ATMOSPHERE)*	0	4	1
NET LONG WAVE RADIATION FLUX (SURFACE)*	0	5	0
NET LONG WAVE RADIATION FLUX (TOP OF ATMOSPHERE)*	0	5	1
UPPER LAYER SOIL TEMPERATURE*	2	3	1
LOWER LAYER SOIL TEMPERATURE*	2	3	4
UPPER LAYER SOIL MOISTURE*	2	3	2
LOWER LAYER SOIL MOISTURE*	2	3	3
LOW CLOUD COVER*	0	6	3
MEDIUM CLOUD COVER*	0	6	4
HIGH CLOUD COVER*	0	6	5

NOTE: *PARAMETER DEPRECATED - SEE REGULATION 92.6.2 AND USE ANOTHER PARAMETER INSTEAD.

6) Deprecate:

PARAMETER NAME	DISCIPLINE	CATEGORY	PARAMETER NUMBER
PRECIPITATION RATE*	0	1	7
SNOWFALL RATE WATER EQUIVALENT*	0	1	12

NOTE: *PARAMETER DEPRECATED - SEE REGULATION 92.6.2 AND USE ANOTHER PARAMETER INSTEAD.

7) Add new parameters:

PARAMETER NAME	DISCIPLINE	CATEGORY	PARAMETER NUMBER
TOTAL(1) PRECIPITATION RATE	0	1	52
TOTAL(1) SNOWFALL RATE WATER EQUIVALENT	0	1	53

NOTE: (1) TOTAL PRECIPITATION/SNOWFALL RATE STANDS FOR THE SUM OF CONVECTIVE AND LARGE-SCALE PRECIPITATION/SNOWFALL RATE

8) Add new parameters:

PARAMETER NAME	UNIT	DISCIPLINE	CATEGORY	PROPOSED PARAMETER NUMBER
LARGE SCALE PRECIPITATION RATE	KG M^{-2} S^{-1}	0	1	54
CONVECTIVE SNOWFALL RATE WATER EQUIVALENT	KG M^{-2} S^{-1}	0	1	55

LARGE SCALE SNOWFALL RATE WATER EQUIVALENT	KG M^{-2} S^{-1}	0	1	56
TOTAL SNOWFALL RATE	M S^{-1}	0	1	57
CONVECTIVE SNOWFALL RATE	M S^{-1}	0	1	58
LARGE SCALE SNOWFALL RATE	M S^{-1}	0	1	59

9) Deprecate:

PARAMETER TO BE DEPRECATED	DISCIPLINE	CATEGORY	PARAMETERNUMBER
TOTAL PRECIPITATION*	0	1	8
LARGE SCALE PRECIPITATION*	0	1	9
CONVECTIVE PRECIPITATION*	0	1	10
CONVECTIVE SNOW*	0	1	14
LARGE SCALE SNOW*	0	1	15
TOTAL SNOWFALL*	0	1	29

Note: *Parameter deprecated - See Regulation 92.6.2 and use another parameter instead.

10) Deprecate:

NAME OF PARAMETER	DISCIPLINE	CATEGORY	PARAMETER NUMBER
SOIL MOISTURE CONTENT*	2	0	3
MAXIMUM SNOW ALBEDO*	0	19	17
GROUND HEAT FLUX*	2	0	10
WATER EQUIVALENT OF ACCUMULATED SNOW DEPTH*	0	1	13

Note: *Parameter deprecated - See Regulation 92.6.2 and use another parameter instead.

11) Add new parameters:

PROPOSED PARAMETER NAME	DISCIPLINE	CATEGORY	PARAMETER NUMBER	UNIT
COLUMN-INTEGRATED SOIL WATER	2	0	23	KG M^{-2}
SNOW ALBEDO	0	19	19	%
HEAT FLUX	2	0	24	W M^{-2}
SNOW DEPTH WATER EQUIVALENT	0	1	60	KG M^{-2}

12) Add new parameter:

STANDARD DEVIATION OF SUB-GRID SCALE OROGRAPHY	0	3	20	M

13) Add new parameter

CLOUD ICE MIXING RATIO	0	6	23	KG KG^{-1}

14) Add new parameter

TOTAL COLUMN INTEGRATED OZONE	0	14	2	DOBSON	

15) Add new parameters

NAME	UNIT	DISCIPLINE	CATEGORY	PROPOSED PARAMETER NUMBER
SKIN TEMPERATURE	K	0	0	17
SUNSHINE	NUMERIC	0	6	24
SNOW DENSITY	KG M^{-3}	0	1	61
ICE TEMPERATURE	K	10	2	8
SNOW EVAPORATION	KG M^{-2}	0	1	62

LARGE SCALE PRECIPITATION FRACTION	S	0	1	63
DOWNWARD UV RADIATION	W M^{-2}	0	4	12
PHOTOSYNTHETICALLY ACTIVE RADIATION	W M^{-2}	0	4	10
TOTAL COLUMN INTEGRATED WATER VAPOUR	KG M^{-2}	0	1	64
ANISOTROPY OF SUB-GRIDSCALE OROGRAPHY	NUMERIC	0	3	24
ANGLE OF SUB-GRIDSCALE OROGRAPHY	RAD	0	3	21
SLOPE OF SUB-GRIDSCALE OROGRAPHY	NUMERIC	0	3	22
GRAVITY WAVE DISSIPATION	W M^{-2}	0	3	23
NET SHORT-WAVE RADIATION FLUX CLEAR SKY	W M^{-2}	0	4	11
NET LONG-WAVE RADIATION FLUX, CLEAR SKY	W M^{-2}	0	5	6

Annex 2 to Recommendation 4 (CBS-Ext. (06))

ADDITIONS TO FM 94-XIII BUFR

FOR REPORTING DEGREE OF TURBULENCE IN WAFS SIGWX MESSAGES

Add:

F X Y	Element name	BUFR				CREX		
0 11 030	Extended degree of turbulence	Code table	0	0	6	Code table	0	2

0 11 030

Extended degree of turbulence

Code figure

0	Nil	in cloud
1	Light	
2	Moderate	
3	Severe	
4	Nil	in clear air
5	Light	
6	Moderate	
7	Severe	
8	Nil	cloud/clear air not specified
9	Light	
10	Moderate (MOD)	
11	Severe (SEV)	
12	Extreme, in clear air	
13	Extreme, in cloud	
14	Extreme, cloud/clear air not specified (EXTREME)	

15	Light, isolated moderate (ISOL MOD)
16	Light, occasional moderate (OCNL MOD)
17	Light, frequently moderate (FRQ MOD)
18	Moderate, isolated severe (MOD ISOL SEV)
19	Moderate, occasional severe (MOD OCNL SEV)
20	Moderate, frequently severe (MOD FRQ SEV)
21	Severe, isolated extreme (SEV ISOL EXTREME)
22	Severe, occasional extreme (SEV OCNL EXTREME)
23	Severe, frequently extreme (SEV FRQ EXTREME)
24-62	Reserved
63	Missing value

SEQUENCE DESCRIPTORS FOR SYNOPTIC REPORTS FROM LAND AND SEA STATIONS (SUITABLE FOR SYNOP, SYNOP MOBIL AND SHIP OBSERVATION DATA)

New sequence descriptors 3 02 046, 3 02 047 and 3 02 048

3 02 046 is proposed to express the data of the SYNOP group $54g_0s_nd_T$, where

g_0 is "Period of time, in hours, between the time of observation and the temperature change",

s_n is "Sign of the temperature change" – Code table 3845,

d_T is " Amount of temperature change, the sign of the change given by s_n "– Code table 0822.

						(Temperature change)
3	02	046	0	04	024	Time period or displacement
			0	04	024	Time period or displacement
			0	12	049	Temperature change over period specified

3 02 047 is proposed to express data of SYNOP group $56D_LD_MD_H$, where

D_L is "True direction from which C_L clouds are moving" – Code table 0700,

D_M is "True direction from which C_M clouds are moving" – Code table 0700,

D_H is "True direction from which C_H clouds are moving" – Code table 0700.

						(Direction of cloud drift)
3	02	047	1	02	003	Replicate 2 descriptors 3 times
			0	08	002	Vertical significance
			0	20	054	True direction from which clouds are moving

3 02 048 is proposed to express data of SYNOP group $57CD_ae_C$, where

C is "Genus of cloud" – Code table 0500,

D_a is "True direction in which the phenomenon indicated is observed" – Code table 0700,

e_C is "Elevation angle of the top of the cloud indicated by C" – Code table 1004.

						(Direction and elevation of cloud)
3	02	048	0	05	021	Bearing or azimuth
			0	07	021	Elevation angle
			0	20	012	Cloud type
			0	05	021	Bearing or azimuth (= missing to cancel the previous value)
			0	07	021	Elevation angle (= missing to cancel the previous value)

For data representation of groups $54g_0s_nd_T$ and $56D_LD_MD_H$ of SYNOP Section 3, following BUFR/CREX Table B entries are proposed (0 12 049 for representation of s_nd_T, 0 20 054 for D_L, D_M and D_H):

F X Y	Element name	BUFR				CREX		
0 12 049	Temperature change over specified period	K	0	-30	6	^oC	0	2
0 20 054	True direction from which a phenomenon or clouds are moving	Degree true	0	0	9	Degree true	0	3

Note: By naming descriptor **0 20 054** "**True direction from which a phenomenon or clouds are moving**" it will allow its usage for data representation of groups $919M_WD_a$ (type of water spout, tornado, whirlwind, dustdevils and direction from which they approach the station) and $918s_qD_p$ (type of squall and direction from which it approaches the station).

NEW DESCRIPTORS FOR REGIONAL PRACTICES

F X Y	Element name	BUFR				CREX		
0 12 121	Ground minimum temperature	K	2	0	16	^oC	2	4
0 12 122	Ground minimum temperature of the preceding night	K	2	0	16	^oC	2	4
0 13 056	Character and intensity of precipitation	Code table	0	0	4	Code table	0	2
0 13 057	Time of beginning or end of precipitation	Code table	0	0	4	Code table	0	2
0 20 040	Evolution of drift of snow	Code table	0	0	4	Code table	0	2
0 20 055	State of sky in tropics	Code table	0	0	4	Code table	0	2
0 20 066	Maximum diameter of hailstones	m	3	0	8	m	3	3
0 20 067	Diameter of deposit	m	3	0	9	m	3	3
0 20 101	Locust (acridian) name	Code table	0	0	4	Code table	0	2
0 20 102	Locust (maturity) color	Code table	0	0	4	Code table	0	2
0 20 103	Stage of development of locusts	Code table	0	0	4	Code table	0	2
0 20 104	Organization state of swarm or band of locusts	Code table	0	0	4	Code table	0	2
0 20 105	Size of swarm or band of locusts and duration of passage of swarm	Code table	0	0	4	Code table	0	2
0 20 106	Locust population density	Code table	0	0	4	Code table	0	2
0 20 107	Direction of movements of locust swarm	Code table	0	0	4	Code table	0	2
0 20 108	Extent of vegetation	Code table	0	0	4	Code table	0	2

Proposed new Code tables:

		Manual on Codes, WMO-No. 306, Vol. II
0 13 056 -	Character and intensity of precipitation	Code table 167
0 13 057 -	Time of beginning or end of precipitation	Code table 168
0 20 055 -	State of sky in tropics	Code table 430
0 20 101 -	Locust (acridian) name	Code table 162
0 20 102 -	Locust (maturity) color	Code table 159

		Manual on Codes, WMO-No. 306, Vol. II
0 20 103 -	Stage of development of locusts	Code table 160
0 20 104 -	Organization state of swarm or band of locusts	Code table 161
0 20 105 -	Size of swarm or band of locusts and duration of passage of swarm	Code table 173
0 20 106 -	Locust population density	Code table 139
0 20 107 -	Direction of movements of locust swarm	Code table 140
0 20 108 -	Extent of vegetation	Code table 182

The existing extent of the above listed Code tables from the *Manual on Codes*, WMO-No. 306, Volume II, is to be supplemented by code figures 10-14 Reserved and by code figure15 Missing value.

Code Table 0 20 040 is proposed to express code figures for S'_8 (Code table 3776, *Manual on Codes*, WMO-No. 306, Volume I.1).

0 20 040

Code figure	**Evolution of drift of snow**
0	Drift snow ended before the hour of observation
1	Intensity diminishing
2	No change
3	Intensity increasing
4	Continues, apart from interruption lasting less than 30 minutes
5	General drift snow has become drift snow near the ground
6	Drift snow near the ground has become general drift snow
7	Drift snow has started again after an interruption of more than 30 minutes
8 -14	Reserved
15	Missing value

Additions to the existing Flag tables:

0 20 023

Bit No.	**Other weather phenomena**
12	Water-spout

0 20 027

Bit No.	**Phenomenon occurrence**
6	Below station level

ADD COMMON SEQUENCES OF BUFR TEMPLATE FOR SYNOPTIC REPORTS FROM FIXED LAND STATIONS SUITABLE FOR SYNOP OBSERVATION DATA

		Sequence for representation of synoptic reports from a fixed land station suitable for SYNOP data
3 07 080	3 01 090	Fixed surface station identification, time, horizontal and vertical coordinates
	3 02 031	Pressure data
	3 02 035	Basic synoptic “instantaneous” data
	3 02 036	Clouds with bases below station level
	3 02 047	Direction of cloud drift
	0 08 002	Vertical significance
	3 02 048	Direction and elevation of cloud
	3 02 037	State of ground, snow depth, ground minimum temperature
	3 02 043	Basic synoptic “period” data
	3 02 044	Evaporation data
	1 01 002	Replicate next descriptor 2 times
	3 02 045	Radiation data (from 1 hour and/or 24 hour period)
	3 02 046	Temperature change

New sequences for BUFR template for synoptic reports from fixed land stations:

		Pressure data
3 02 031	3 02 001	Pressure
	0 10 062	24-hour pressure change **$p_{24}p_{24}p_{24}$**
	0 07 004	Pressure (standard level) **a_3**
	0 10 009	Geopotential height of the standard level **hhh**
		Basic synoptic “instantaneous” data
3 02 035	**3 02 032**	Temperature and humidity data
	3 02 033	Visibility data
	3 02 034	Precipitation past 24 hours
	0 07 032	Height of sensor above local ground (set to missing to cancel the previous value)
	3 02 004	General cloud information
	1 01 000	Delayed replication of 1 descriptor
	0 31 001	Delayed descriptor replication factor
	3 02 005	Cloud data
		Temperature and humidity data
3 02 032	0 07 032	Height of sensor above local ground (for temperature and humidity measurement)
	0 12 101	Temperature/dry-bulb temperature(sc.2) **s_nTTT**
	0 12 103	Dew-point temperature (scale 2) **$s_nT_dT_dT_d$**
	0 13 003	Relative humidity
		Visibility data
3 02 033	*0 07 032*	Height of sensor above local ground (for visibility measurement)
	0 20 001	Horizontal visibility **VV**

		Precipitation past 24 hours
3 02 034	0 07 032	Height of sensor above local ground (for precipitation measurement)
	0 13 023	Total precipitation past 24 hours **$R_{24}R_{24}R_{24}R_{24}$**

		Clouds with bases below station level
3 02 036	1 05 000	Delayed replication of 5 descriptors
	0 31 001	Delayed descriptor replication factor
	0 08 002	Vertical significance
	0 20 011	Cloud amount **N'**
	0 20 012	Cloud type **C'**
	0 20 014	Height of top of cloud **H'H'**
	0 20 017	Cloud top description $\mathbf{C_t}$
		State of ground, snow depth, ground minimum temperature
3 02 037	0 20 062	State of ground (with or without snow) **E** or **E'**
	0 13 013	Total snow depth **sss**
	0 12 113	Ground minimum temperature (scale2), past 12 hours $\mathbf{s_nT_gT_g}$
		Basic synoptic "period" data
3 02 043	**3 02 038**	Present and past weather
	1 01 002	Replicate 1 descriptors 2 times
	3 02 039	Sunshine data (from 1 hour and 24 hour period)
	3 02 040	Precipitation measurement
	3 02 041	Extreme temperature data
	3 02 042	Wind data
	0 07 032	Height of sensor above local ground (set to missing to cancel the previous value)

		Present and past weather
3 02 038	0 20 003	Present weather **ww**
	0 04 024	Time period in hours
	0 20 004	Past weather (1) $\mathbf{W_1}$
	0 20 005	Past weather (2) $\mathbf{W_2}$

		Sunshine data (from 1 hour and 24 hour period)
3 02 039	0 04 024	Time period in hours
	0 14 031	Total sunshine **SS** and **SSS**

		Precipitation measurement
3 02 040	0 07 032	Height of sensor above local ground (for precipitation measurement)
	1 02 002	Replicate next 2 descriptors 2 times
	0 04 024	Time period in hours $\mathbf{t_R}$
	0 13 011	Total precipitation / total water equivalent of snow **RRR**

		Extreme temperature data
3 02 041	0 07 032	Height of sensor above local ground (for temperature measurement)
	0 04 024	Time period or displacement
	0 04 024	Time period or displacement (see Notes 1 and 2)
	0 12 111	Maximum temperature (scale 2) at height and over period specified $\mathbf{s_nT_xT_xT_x}$

	0 04 024	Time period or displacement
	0 04 024	Time period or displacement (see Note 2)
	0 12 112	Minimum temperature (scale 2) at height and over period specified $\mathbf{s_nT_nT_nT_n}$
		Wind data
3 02 042	0 07 032	Height of sensor above local ground (for wind measurement)
	0 02 002	Type of instrumentation for wind measurement $\mathbf{i_w}$
	0 08 021	Time significance (= 2 (time averaged))
	0 04 025	Time period (= - 10 minutes, or number of minutes after a significant change of wind)
	0 11 001	Wind direction **dd**
	0 11 002	Wind speed **ff**
	0 08 021	Time significance (= missing value)
	1 03 002	Replicate next 3 descriptors 2 times
	0 04 025	Time period in minutes
	0 11 043	Maximum wind gust direction
	0 11 041	Maximum wind gust speed 910$\mathbf{f_mf_m}$, 911$\mathbf{f_xf_x}$

		Evaporation data
3 02 044	0 04 024	Time period in hours
	0 02 004	Type of instrument for evaporation or crop type for evapotranspiration $\mathbf{i_E}$
	0 13 033	Evaporation/evapotranspiration **EEE**

		Radiation data (from 1 hour and 24 hour period)
3 02 045	0 04 024	Time period in hours
	0 14 002	Long-wave radiation, integrated over period specified 553SS 4**FFFF** or 553SS 5**FFFF,** 5SSS 4$\mathbf{F_{24}F_{24}F_{24}F_{24}}$ or 5SSS 5$\mathbf{F_{24}F_{24}F_{24}F_{24}}$
	0 14 004	Short-wave radiation, integrated over period specified 553SS 6**FFFF,** 55SSS 6$\mathbf{F_{24}F_{24}F_{24}F_{24}}$
	0 14 016	Net radiation, integrated over period specified 553SS 0**FFFF** or 553SS 1**FFFF,** 55SSS 0$\mathbf{F_{24}F_{24}F_{24}F_{24}}$ or 55SSS 1$\mathbf{F_{24}F_{24}F_{24}F_{24}}$
	0 14 028	Global solar radiation (high accuracy), integrated over period specified 553SS 2**FFFF,** 55SSS 2$\mathbf{F_{24}F_{24}F_{24}F_{24}}$
	0 14 029	Diffuse solar radiation (high accuracy), integrated over period specified 553SS 3**FFFF,** 55SSS 3$\mathbf{F_{24}F_{24}F_{24}F_{24}}$
	0 14 030	Direct solar radiation (high accuracy), integrated over period specified 55408 4**FFFF,** 55508 5$\mathbf{F_{24}F_{24}F_{24}F_{24}}$
		Temperature change group **54**$\mathbf{g_0s_nd_T}$
3 02 046	0 04 024	Time period or displacement
	0 04 024	Time period or displacement (see Note 3)
	0 12 049	Temperature change over period specified $\mathbf{s_nd_T}$

Notes:

1) Within RA-IV, the maximum temperature at 1200 UTC is reported for the previous calendar day (i.e. the ending time of the period is not equal to the nominal time of the report). To construct the required time range, descriptor 004024 has to be included two times. If the period ends at the nominal time of the report, value of the second 004024 shall be set to 0.

2) Within RA-III, the maximum day-time temperature and the minimum night-time temperature is reported (i.e. the ending time of the period may not be equal to the nominal time of the report). To construct the required time range, descriptor 004024 has to be included two times. If the period ends at the nominal time of the report, value of the second 004024 shall be set to 0.

3) To construct the required time range, descriptor 004024 has to be included two times.

NEW SEQUENCES TO FOLLOW REGIONAL REGULATIONS FOR REPORTING SYNOP DATA IN BUFR/CREX:

3 07 081: BUFR template for synoptic reports from fixed land stations suitable for SYNOP data in compliance with reporting practices in RA I

3 01 090	Fixed surface station identification, time, horizontal and vertical coordinates	
3 02 031	Pressure data	
3 02 035	Basic synoptic “instantaneous” data	
3 02 036	Clouds with bases below station level	
3 02 047	Direction of cloud drift	
0 08 002	Vertical significance (= missing to cancel the previous value)	
3 02 048	Direction and elevation of cloud	
3 02 037	State of ground, snow depth, ground minimum temperature (past 12 hours)	
0 12 122	Ground minimum temperature of the preceding night	$s_nT_gT_g$
0 13 056	Character and intensity of precipitation	R_c
0 13 057	Time of beginning or end of precipitation	R_t
0 20 101	Locust (acridian) name	L_n
0 20 102	Locust (maturity) color	L_c
0 20 103	Stage of development of locusts	L_d
0 20 104	Organization state of swarm or band of locusts	L_g
0 20 105	Size of swarm or band of locusts and duration of passage of swarm	s_L
0 20 106	Locust population density	d_L
0 20 107	Direction of movements of locust swarm	D_L
0 20 108	Extent of vegetation	v_e
3 02 043	Basic synoptic “period” data	
3 02 044	Evaporation data	
1 01 002	Replicate next descriptor 2 times	
3 02 045	Radiation data (from 1 hour and/or 24 hour period)	
3 02 046	Temperature change	

3 07 082: BUFR template for synoptic reports from fixed land stations suitable for SYNOP data in compliance with reporting practices in RA II

3 01 090	Fixed surface station identification, time, horizontal and vertical coordinates
3 02 031	Pressure data
3 02 035	Basic synoptic “instantaneous” data
3 02 036	Clouds with bases below station level
3 02 047	Direction of cloud drift

0 08 002	Vertical significance (= missing to cancel the previous value)
3 02 048	Direction and elevation of cloud
3 02 037	State of ground, snow depth, ground minimum temperature (past 12 hours)
0 12 121	Ground minimum temperature (at the time of observation) $s_nT'_gT'_g$
0 12 122	Ground minimum temperature of the preceding night $s_nT_gT_g$
3 02 043	Basic synoptic “period” data
3 02 044	Evaporation data
1 01 002	Replicate next descriptor 2 times
3 02 045	Radiation data (from 1 hour and/or 24 hour period)
3 02 046	Temperature change

3 07 083: BUFR template for synoptic reports from fixed land stations suitable for SYNOP data in compliance with reporting practices in RA III

3 01 090	Fixed surface station identification, time, horizontal and vertical coordinates
3 02 031	Pressure data
3 02 035	Basic synoptic “instantaneous” data
3 02 036	Clouds with bases below station level
3 02 047	Direction of cloud drift
0 08 002	Vertical significance (= missing to cancel the previous value)
3 02 048	Direction and elevation of cloud
3 02 037	State of ground, snow depth, ground minimum temperature (past 12 hours)
0 12 122	Ground minimum temperature of the preceding night $s_nT_gT_g$
3 02 043	Basic synoptic “period” data
3 02 044	Evaporation data
1 01 002	Replicate next descriptor 2 times
3 02 045	Radiation data (from 1 hour and/or 24 hour period)
3 02 046	Temperature change

3 07 084: BUFR template for synoptic reports from fixed land stations suitable for SYNOP data in compliance with reporting practices in RA IV

3 01 090	Fixed surface station identification, time, horizontal and vertical coordinates
3 02 031	Pressure data
3 02 035	Basic synoptic “instantaneous” data
3 02 036	Clouds with bases below station level
3 02 047	Direction of cloud drift
0 08 002	Vertical significance (= missing to cancel the previous value)
3 02 048	Direction and elevation of cloud
3 02 037	State of ground, snow depth, ground minimum temperature (past 12 hours)
0 20 055	State of sky in tropics C_S
1 01 000	Delayed replication of 1 descriptor
0 31 001	Delayed descriptor replication factor
2 05 001	Character field of 1 character
3 02 043	Basic synoptic “period” data
3 02 044	Evaporation data
1 01 002	Replicate next descriptor 2 times
3 02 045	Radiation data (from 1 hour and/or 24 hour period)
3 02 046	Temperature change

3 07 086: BUFR template for synoptic reports from fixed land stations suitable for SYNOP data in compliance with reporting practices in RA VI

3 07 086	3 01 090	Fixed surface station identification, time, horizontal and vertical coordinates	Unit, scale
	3 02 031	Pressure data	
	3 02 035	Basic synoptic “instantaneous” data	
	3 02 036	Clouds with bases below station level	
	0 08 002	Vertical significance (= missing to cancel the previous value)	
	3 02 037	State of ground, snow depth, ground minimum temperature	
	3 02 066	**Dangerous weather phenomena**	
	3 02 043	Basic synoptic “period” data	
	3 02 044	Evaporation data	
	1 01 002	Replicate next descriptor 2 times	
	3 02 045	Radiation data (from 1 hour and/or 24 hour period)	
3 02 066		**Dangerous weather phenomena**	
		Groups 919$M_W D_a$ and 96119 in SYNOP	
	0 20 023	Other weather phenomena **M_W** (1= Dust/sand whirl, 9= Funnel clouds not touching surface, 10 = Funnel clouds touching surface, 12 = Water-spout)	Flag table, 0
	0 20 024	Intensity of phenomena (1= Light, 2 = Moderate, 3 = Heavy, 4 = Violent)	Code table, 0
	0 20 027	Phenomenon occurrence (1=At time of observation, 3=In time period for past weather)	Flag table, 0
	0 20 054	True direction from which a phenomenon or clouds are moving **D_a**	Degree true, 0
		Group 918$s_q D_p$ in SYNOP	
	0 20 023	Other weather phenomena (2 = Squalls) **s_q**	Flag table, 0
	0 20 027	Phenomenon occurrence (1=At time of observation, 3=In time period for past weather)	Flag table, 0
	0 20 054	True direction from which a phenomenon or clouds are moving **D_p**	Degree true, 0
		Group 929$S_8 S'_8$ in SYNOP	
	0 20 025	Obscuration (13 = Snow)	Flag table, 0
	0 20 026	Character of obscuration (5= Low drifting, 6= Blowing) **S_8**	Code table, 0
	0 20 027	Phenomenon occurrence (1=At time of observation, 3=In time period for past weather)	Flag table, 0
	0 20 040	Evolution of drift of snow **S'_8**	Code table, 0
		Group 932RR	
	0 20 066	Maximum diameter of hailstones **RR**	m, 3
	0 20 027	Phenomenon occurrence (1=At time of observation, 3=In time period for past weather)	Flag table, 0
		Groups 934RR- 937RR in SYNOP	
	0 20 021	Type of precipitation (15=Glaze, 16=Rime, 20=Wet snow)	Flag table, 0
	0 20 067	Diameter of deposit **RR**	m, 3
	0 20 027	Phenomenon occurrence (1=At time of observation, 3=In time period for past weather)	Flag table, 0

Note:

Groups 56$D_L D_M D_H$, 57$CD_a e_C$ and 54$g_0 s_n d_T$ are not used in RA VI and therefore the corresponding sequence descriptors 3 02 047, 3 02 048 and 3 02 046 are not included in the RA VI regional template for SYNOP data.

		Sequence for representation of synoptic reports from a mobile land station suitable for SYNOP MOBIL data
3 07 090	3 01 092	Mobile surface station identification, time, horizontal and vertical coordinates
	3 02 031	Pressure data

	3 02 035	Basic synoptic “instantaneous” data
	3 02 036	Clouds with bases below station level
	3 02 047	Direction of cloud drift
	0 08 002	Vertical significance
	3 02 048	Direction and elevation of cloud
	3 02 037	State of ground, snow depth, ground minimum temperature
	3 02 043	Basic synoptic “period” data
	3 02 044	Evaporation data
	1 01 002	Replicate next descriptor 2 times
	3 02 045	Radiation data (from 1 hour and/or 24 hour period)
	3 02 046	Temperature change

			Mobile surface station identification, time, horizontal and vertical coordinates
3 01 092	0 01 011		Mobile land station identifier **D….D**
	0 01 003		WMO Region number $\mathbf{A_1}$
	0 02 001		Type of station $(\mathbf{i_x})$
	3 01 011	0 04 001	Year
		0 04 002	Month
		0 04 003	Day **YY**
	3 01 012	0 04 004	Hour **GG**
		0 04 005	Minute **gg**
	3 01 021	0 05 001	Latitude (high accuracy) $\mathbf{L_aL_aL_a}$
		0 06 001	Longitude (high accuracy) $\mathbf{L_oL_oL_oL_o}$
	0 07 030		Height of station ground above mean sea level
	0 07 031		Height of barometer above mean sea level
	0 33 024		Station elevation quality mark $\mathbf{i_m}$

FOR SEA SURFACE TEMPERATURE MEASUREMENT
New entries (shaded) are proposed for addition in code/flag table 002038

0 02 038

Method of water temperature and/or salinity measurement

Code figure	
0	Ship intake
1	Bucket
2	Hull contact sensor
3	Reversing Thermometer
4	STD/CTD sensor
5	Mechanical BT
6	Expendable BT
7	Digital BT
8	Thermistor chain
9	Infrared scanner
10	Micro-wave scanner
11	Infrared radiometer
12	In line thermosalinograph
13	Towed body
14	Other
15	Missing value

Proposed new descriptor for Depth below sea water surface (High resolution)

TABLE REFERENCE			TABLE ELEMENT NAME	BUFR				CREX		
F	X	Y		UNIT	SCALE	REF. VALUE	DATA WIDTH (Bits)	UNIT	SCALE	DATA WIDTH (Charac.)
0	07	063	Depth below sea/water surface	m	2	0	20	m	2	7

NEW TABLE ENTRIES FOR MARINE DATA

0 08 080 - Qualifier for GTSPP quality class

New Code figure

5-9	*Reserved*
10	**Water pressure at a level**
11	**Water temperature at a level**
12	**Salinity at a level**
13-19	*Reserved*
20	**Position**
21-62	*Reserved*

New table entries to describe profiling float identifier and vertical coordinate below sea/water surface in pressure are necessary as follows.

Table reference	Table element name	Unit	Scale	Ref.	Data width
001087	**WMO Marine observing platform extended identifier**	Numeric	0	0	23
007065	**Water pressure**	Pa	-3	0	17

SEQUENCE FOR REPRESENTATION OF SYNOPTIC REPORTS FROM A SEA STATION SUITABLE FOR SHIP DATA

		Sequence for representation of synoptic reports from a sea station suitable for SHIP data
3 08 009	3 01 093	Ship identification, movement, date/time, horizontal and vertical coordinates
	3 02 001	Pressure data
	3 02 054	SHIP “instantaneous” data
	0 08 002	Vertical significance
	3 02 055	Icing and ice
	3 02 057	SHIP marine data
	3 02 060	SHIP “period” data

		Ship identification, movement, date/time, horizontal and vertical coordinates
3 01 093	3 01 036	Ship
	0 07 030	Height of station platform above mean sea level
	0 07 031	Height of barometer above mean sea level
		SHIP “instantaneous” data
3 02 054	**3 02 052**	Temperature and humidity data
	3 02 053	Visibility data
	0 07 033	Height of sensor above water surface (set to missing to cancel the previous value)
	3 02 034	Precipitation past 24 hours
	0 07 032	Height of sensor above marine deck platform (set to missing to cancel the previous value)
	3 02 004	General cloud information
	1 01 000	Delayed replication of 1 descriptor

	0 31 001	Delayed descriptor replication factor
	3 02 005	Cloud data
		Temperature and humidity data
3 02 052	0 07 032	Height of sensor above marine deck platform (for temperature and humidity measurement)
	0 07 033	Height of sensor above water surface (for temperature and humidity measurement)
	0 12 101	Temperature/dry-bulb temperature(sc.2) $\mathbf{s_nTTT}$
	0 02 039	Method of wet-bulb temperature measurement
	0 12 102	Wet-bulb temperature (scale 2) $\mathbf{s_wT_bT_bT_b}$
	0 12 103	Dew-point temperature (scale 2) $\mathbf{s_nT_dT_dT_d}$
	0 13 003	Relative humidity

		Visibility data
3 02 053	0 07 032	Height of sensor above marine deck platform (for visibility measurement)
	0 07 033	Height of sensor above water surface (for visibility measurement)
	0 20 001	Horizontal visibility **VV**
		Icing and ice
3 02 055	0 20 031	Ice deposit (thickness) $\mathbf{E_sE_s}$
	0 20 032	Rate of ice accretion $\mathbf{R_s}$
	0 20 033	Cause of ice accretion $\mathbf{I_s}$
	0 20 034	Sea ice concentration $\mathbf{c_i}$
	0 20 035	Amount and type of ice $\mathbf{b_i}$
	0 20 036	Ice situation $\mathbf{z_i}$
	0 20 037	Ice development $\mathbf{S_i}$
	0 20 038	Bearing of ice edge $\mathbf{D_i}$
		SHIP marine data
3 02 057	**3 02 056**	Sea surface temperature, method of measurement, and depth below sea surface
	3 02 021	Waves
	3 02 024	Direction of wind waves
		Sea surface temperature, method of measurement, and depth below sea surface
3 02 056	0 02 038	Method of sea/water temperature measurement
	0 07 063	Depth below sea/water surface (for sea surface temperature measurement)
	0 22 043	Sea/water temperature $\mathbf{s_sT_wT_wT_w}$
	0 07 063	Depth below sea/water surface (set to missing to cancel the previous value)
3 02 060		**SHIP "period" data**
	3 02 038	Present and past weather
	3 02 058	Extreme temperature data
	3 02 059	Wind data
		Extreme temperature data
3 02 058	0 07 032	Height of sensor above marine deck platform (for temperature measurement)
	0 07 033	Height of sensor above water surface (for temperature measurement)

	0 04 024	Time period or displacement
	0 04 024	Time period or displacement (see Notes 1 and 2)
	0 12 111	Maximum temperature (scale 2) at height and over period specified $\mathbf{s_nT_xT_xT_x}$
	0 04 024	Time period or displacement
	0 04 024	Time period or displacement (see Note 2)
	0 12 112	Minimum temperature (scale 2) at height and over period specified $\mathbf{s_nT_nT_nT_n}$

		Wind data
3 02 059	0 07 032	Height of sensor above marine deck platform (for wind measurement)
	0 07 033	Height of sensor above water surface (for wind measurement)
	0 02 002	Type of instrumentation for wind measurement $\mathbf{i_w}$
	0 08 021	Time significance (= 2; time averaged)
	0 04 025	Time period (= - 10 minutes, or number of minutes after a significant change of wind)
	0 11 001	Wind direction **d**
	0 11 002	Wind speed **ff**
	0 08 021	Time significance (= missing value)
	1 03 002	Replicate next 3 descriptors 2 times
	0 04 025	Time period in minutes
	0 11 043	Maximum wind gust direction
	0 11 041	Maximum wind gust speed 910$\mathbf{f_mf_m}$, 911$\mathbf{f_xf_x}$

SEQUENCES FOR REPRESENTATION OF MONTHLY VALUES SUITABLE FOR CLIMAT DATA

		Sequence for representation of monthly values suitable for CLIMAT data
3 07 073	3 07 071	Monthly values from a land station
	3 07 072	Monthly normals for a land station

		Monthly values from a land station (data of CLIMAT Sections 0, 1, 3 and 4)
3 07 071	**3 01 090**	Surface station identification, date/time[(1)], horizontal and vertical co-ordinates
		Monthly mean values of pressure, temperature, extreme temperatures and vapour pressure
	0 04 074	Short time displacement (= UTC – LST)[(1)]
	0 04 023	Time period (= number of days in the month)
	0 08 023	First order statistics (= 4; mean value)
	0 10 004	Pressure $\overline{\mathbf{P_oP_oP_oP_o}}$
	0 10 051	Pressure reduced to msl $\overline{\mathbf{PPPP}}$
	0 07 004	Pressure (standard level) (for lowland stations = missing value)
	0 10 009	Geopotential height of the standard level $\overline{\mathbf{PPPP}}$ (for lowland stations = missing value)
	0 07 032	Height of sensor above local ground
	0 12 101	Temperature/dry-bulb temperature $\overline{\mathbf{s_nTTT}}$
	0 02 051	Indicator to specify observing method for extreme temperatures $\mathbf{i_y}$

	0 04 051	Principal time of daily reading of maximum temperature **G_xG_x**
	0 12 118	Maximum temperature at height specified, past 24 hours **$s_nT_xT_xT_x$**
	0 04 052	Principal time of daily reading of minimum temperature **G_nG_n**
	0 12 119	Minimum temperature at height specified, past 24 hours **$s_nT_nT_nT_n$**
	0 13 004	Vapour pressure **$\overline{eee}$**
	0 08 023	First order statistics (= 63; missing value)
	0 12 151	Standard deviation of daily mean temperature **$s_ts_ts_t$**
	0 07 032	*Height of sensor above local ground* (set to missing to cancel the previous value)
	1 02 005	Replicate 2 descriptors 5 times

	0 08 050	Qualifier for number of missing values in calculation of statistic (= 1; pressure) (= 2; temperature) (= 4; vapour pressure) (= 7; maximum temperature) (= 8; minimum temperature)
	0 08 020	Total number of missing entities (days) **m_pm_p** (for pressure) **m_Tm_T** (for temperature) **m_em_e** (for vapour pressure) **m_{Tx}** (for maximum temperature) **m_{Tn}** (for minimum temperature)
		Monthly sunshine duration
	0 14 032	Total sunshine **$S_1S_1S_1$**
	0 14 033	Total sunshine **$p_sp_sp_s$**
	0 08 050	Qualifier for number of missing values in calculation of statistic (= 6; sunshine duration)
	0 08 020	Total number of missing entities (days) **m_Sm_S**
		Number of days with parameters beyond certain thresholds or with hail or thunderstorm
	1 02 018	Replicate 2 descriptors 18 times
	0 08 052	Conditions for which number of days of occurrence follows (= 0; wind ≥ 10 m/s) (= 1; wind ≥ 20 m/s) (= 2; wind ≥ 30 m/s) (= 3; max. T <273.15 K) (= 4; max. T ≥ 298.15 K) (= 5; max. T ≥ 303.15 K) (= 6; max. T ≥ 308.15 K) (= 7; max. T ≥ 313.15 K) (= 8; min. T < 273.15 K) (= 16; sss > 0.00 m) (= 17; sss > 0.01 m) (= 18; sss > 0.10 m) (= 19; sss > 0.50 m) (= 20; horizontal visibility < 50 m) (= 21; horizontal visibility < 100 m) (= 22; horizontal visibility < 1000 m) (= 23; hail) (= 24; thunderstorm)

	0 08 022	Total number (of days) $\mathbf{f_{10}f_{10}}$ (wind ≥10 m/s) $\mathbf{f_{20}f_{20}}$ (wind ≥ 20 m/s) $\mathbf{f_{30}f_{30}}$ (wind ≥ 30 m/s) $\mathbf{T_{x0}T_{x0}}$ (T_x < 273.15 K) $\mathbf{T_{25}T_{25}}$ (T_x ≥ 298.15 K) $\mathbf{T_{30}T_{30}}$ (T_x ≥ 303.15 K) $\mathbf{T_{35}T_{35}}$ (T_x ≥ 308.15 K) $\mathbf{T_{40}T_{40}}$ (T_x ≥ 313.15 K) $\mathbf{T_{n0}T_{n0}}$ (T_n < 273.15 K) $\mathbf{s_0s_0}$ (sss > 0.00 m) $\mathbf{s_1s_1}$ (sss > 0.01 m) $\mathbf{s_{10}s_{10}}$ (sss > 0.10 m) $\mathbf{s_{50}s_{50}}$ (sss > 0.50 m) $\mathbf{V_1V_1}$ (h. viz. < 50 m) $\mathbf{V_2V_2}$ (h. viz. < 100 m) $\mathbf{V_3V_3}$ (h. viz. < 1000 m) $\mathbf{D_{gr}D_{gr}}$ (hail) $\mathbf{D_{ts}D_{ts}}$ (thunderstorm)
		Occurrence of extreme values of temperature and wind speed
	0 07 032	Height of sensor above local ground
	0 08 053	Day of occurrence qualifier (= 0; on 1 day only) (= 1; on 2 or more days)
	0 04 003	Day $\mathbf{y_xy_x}$
	0 12 152	Highest daily mean temperature $\mathbf{s_nT_{xd}T_{xd}T_{xd}}$
	0 08 053	Day of occurrence qualifier (= 0; on 1 day only) (= 1; on 2 or more days)
	0 04 003	Day $\mathbf{y_ny_n}$
	0 12 153	Lowest daily mean temperature $\mathbf{s_nT_{nd}T_{nd}T_{nd}}$
	0 08 053	Day of occurrence qualifier (= 0; on 1 day only) (= 1; on 2 or more days)
	0 04 003	Day $\mathbf{y_{ax}y_{ax}}$
	0 08 023	First order statistics (= 2; maximum value)
	0 12 101	Temperature/dry-bulb temperature $\mathbf{s_nT_{ax}T_{ax}T_{ax}}$
	0 08 053	Day of occurrence qualifier (= 0; on 1 day only) (= 1; on 2 or more days)
	0 04 003	Day $\mathbf{y_{an}y_{an}}$
	0 08 023	First order statistics (= 3; minimum value)
	0 12 101	Temperature/dry-bulb temperature $\mathbf{s_nT_{an}T_{an}T_{an}}$
	0 08 023	First order statistics (= 63; missing value)
	0 07 032	Height of sensor above local ground
	0 02 002	Type of instrumentation for wind measurement
	0 08 053	Day of occurrence qualifier (= 0; on 1 day only) (= 1; on 2 or more days)
	0 04 003	Day $\mathbf{y_{fx}y_{fx}}$
	0 11 046	Maximum instantaneous wind speed $\mathbf{f_xf_xf_x}$
	0 08 053	Day of occurrence qualifier (set to missing to cancel the previous value)
		Monthly values of precipitation
	0 04 003	Day (= 1) (2)
	0 04 004	Hour (= 6) (2)
	0 04 023	Time period (= number of days in the month) (2)
	0 07 032	Height of sensor above local ground
	0 13 060	Total accumulated precipitation $\mathbf{R_1R_1R_1R_1}$
	0 13 051	Frequency group; precipitation $\mathbf{R_d}$
	0 04 053	Number of days with precipitation equal to or more than 1 mm

		$\mathbf{n_r n_r}$
	0 08 050	Qualifier for number of missing values in calculation of statistic (= 5; precipitation)
	0 08 020	Total number of missing entities (days) $\mathbf{m_R m_R}$ (for precipitation)
		Number of days with precipitation beyond certain thresholds
	1 02 006	Replicate 2 descriptors 6 times
	0 08 052	Conditions for which number of days of occurrence follows (= 10; precipitation ≥ 1.0 kg m^{-2}) (= 11; precipitation ≥ 5.0 kg m^{-2}) (= 12; precipitation ≥ 10.0 kg m^{-2}) (= 13; precipitation ≥ 50.0 kg m^{-2}) (= 14; precipitation ≥ 100.0 kg m^{-2}) (= 15; precipitation ≥ 150.0 kg m^{-2})
	0 08 022	Total number (of days) $\mathbf{R_1R_1}$ (precipitation ≥ 1.0 kg m^{-2}) $\mathbf{R_5R_5}$ (precipitation ≥ 5.0 kg m^{-2}) $\mathbf{R_{10}R_{10}}$ (precipitation ≥ 10.0 kg m^{-2}) $\mathbf{R_{50}R_{50}}$ (precipitation ≥ 50.0 kg m^{-2}) $\mathbf{R_{100}R_{100}}$ (precipitation ≥ 100.0 kg m^{-2}) $\mathbf{R_{150}R_{150}}$ (precipitation ≥ 150.0 kg m^{-2})
		Occurrence of extreme precipitation
	0 08 053	Day of occurrence qualifier (= 0; on 1 day only) (= 1; on 2 or more days)
	0 04 003	Day $\mathbf{y_r y_r}$
	0 13 052	Highest daily amount of precipitation $\mathbf{R_xR_xR_x}$
	0 07 032	Height of sensor above local ground (set to missing to cancel the previous value)

Notes:

1) The time identification refers to the beginning of the one-month period.
2) In case of precipitation measurements, the one-month period begins at 06 UTC on the first day of the month and ends at 06 UTC on the first day of the following month.
3) If the height of the sensor was changed during the period specified, the value shall be that which existed for the greater part of the period.

		Monthly normals for a land station (data of CLIMAT Section 2)
3 07 072	0 04 001	Year (of beginning of the reference period)
	0 04 001	Year (of ending of the reference period)
	0 04 002	Month
	0 04 003	Day (= 1) (1)
	0 04 004	Hour (= 0) (1)
	0 04 074	Short time displacement (= UTC – LST)(1)
	0 04 022	Time period (= 1)
		Normals of monthly mean pressure, temperatures, vapour pressure and of standard deviation
	0 08 023	First order statistics (= 4; mean value)
	0 10 004	Pressure $\overline{\mathbf{P_oP_oP_oP_o}}$
	0 10 051	Pressure reduced to msl $\overline{\mathbf{PPPP}}$
	0 07 004	Pressure (standard level)
	0 10 009	Geopotential height of the standard level _____

		PPPP
	0 07 032	Height of sensor above local ground
	0 12 101	Temperature/dry-bulb temperature $\mathbf{s_n\overline{TTT}}$
	0 02 051	Indicator to specify observing method for extreme temperatures $\mathbf{i_y}$
	0 04 051	Principal time of daily reading of maximum temperature $\mathbf{G_xG_x}$
	0 12 118	Maximum temperature at height specified, past 24 h. $\mathbf{s_n\overline{T_xT_xT_x}}$
	0 04 052	Principal time of daily reading of minimum temperature $\mathbf{G_nG_n}$
	0 12 119	Minimum temperature at height specified, past 24 h. $\mathbf{s_n\overline{T_nT_nT_n}}$
	0 13 004	Vapour pressure $\mathbf{\overline{eee}}$
	0 12 151	Standard deviation of daily mean temperature $\mathbf{\overline{s_ts_ts_t}}$
	0 07 032	Height of sensor above local ground (set to missing to cancel the previous value)
		Normal of sunshine duration
	0 14 032	Total sunshine $\mathbf{S_1S_1S_1}$
	0 08 023	First order statistics (= 63; missing value)
		Normals of precipitation
	0 04 001	Year (of beginning of the reference period)
	0 04 001	Year (of ending of the reference period)
	0 04 002	Month
	0 04 003	Day (= 1) (2)
	0 04 004	Hour (= 6) (2)
	0 04 022	Time period (= 1)
	0 07 032	Height of sensor above local ground
	0 08 023	First order statistics (= 4; mean value)
	0 13 060	Total accumulated precipitation $\mathbf{R_1R_1R_1R_1}$
	0 04 053	Number of days with precipitation equal to or more than 1 mm $\mathbf{n_rn_r}$
	0 08 023	First order statistics (= 63; missing value)
		Number of missing years
	1 02 008	Replicate 2 descriptors 8 times
	0 08 050	Qualifier for number of missing values in calculation of statistic (= 1; pressure) (= 2; temperature) (= 3; extreme temperatures)(4) (= 4; vapour pressure) (= 5; precipitation) (= 6; sunshine duration) (= 7; maximum temperature) (4) (= 8; minimum temperature) (4)
	0 08 020	Total number of missing entities (years) $\mathbf{y_py_p}$ (for pressure) $\mathbf{y_Ty_T}$ (for temperature) $\mathbf{y_{Tx}y_{Tx}}$ (for extreme temperatures)(4) $\mathbf{y_ey_e}$ (for vapour pressure) $\mathbf{y_Ry_R}$ (for precipitation) $\mathbf{y_Sy_S}$ (for sunshine duration) for maximum temperature (4)

		for minimum temperature (4)

Notes:

1) The time identification refers to the beginning of the one-month period.
2) In case of precipitation measurements, the one-month period begins at 06 UTC on the first day of the month and ends at 06 UTC on the first day of the following month.
3) If the height of the sensor was changed during the period specified, the value shall be that which existed for the greater part of the period.
4) The number of missing years within the reference period from the calculation of normal for mean extreme air temperature should be given, if available, for both the calculation of normal maximum temperature and for the calculation of normal minimum temperature in addition to the number of missing years for the extreme air temperatures reported under 0 08 020 preceded by 0 08 050 in which Figure 3 is used.

SEQUENCES FOR REPRESENTATION OF MONTHLY VALUES SUITABLE FOR CLIMAT SHIP DATA

		Sequence for representation of monthly values suitable for CLIMAT SHIP data
3 08 013	3 08 011	Monthly values from an ocean weather station
	3 08 012	Monthly normals for an ocean weather station

		Monthly values from an ocean weather station (data of CLIMAT SHIP Section 1)
3 08 011	0 01 011	Ship's call sign
	0 02 001	Type of station
	3 01 011	Year(1), month(1), day (= 1) (1)
	3 01 012	Hour (= 0) (1) , Minute (= 0) (1)
	3 01 023	Latitude, Longitude (coarse accuracy)
	0 07 030	Height of station platform above mean sea level
	0 07 031	Height of barometer above mean sea level
		Monthly mean values of pressure, temperature, vapour pressure and sea/water temperature
	0 04 074	Short time displacement (= UTC – LST)(1)
	0 04 023	Time period (= number of days in the month)
	0 08 023	First order statistics (= 4; mean value)
	0 10 051	Pressure reduced to mean sea level
	0 07 032	Height of sensor above marine deck platform (for temperature measurement)
	0 07 033	Height of sensor above water surface (for temperature measurement)
	0 12 101	Temperature/dry-bulb temperature
	0 13 004	Vapour pressure
	0 07 032	Height of sensor above marine deck platform (set to missing to cancel the previous value)
	0 07 033	Height of sensor above water surface (set to missing to cancel the previous value)
	3 02 056	Sea surface temperature, method of measurement, and depth below sea surface
	0 08 023	First order statistics (= 63; missing value)
		Monthly precipitation data
	0 04 003	Day (= 1) (2)
	0 04 004	Hour (= 6) (2)
	0 04 023	Time period (= number of days in the month) (2)
	0 07 032	Height of sensor above marine deck platform

	0 13 060	Total accumulated precipitation
	0 13 051	Frequency group; precipitation
	0 04 053	Number of days with precipitation equal to or more than 1 mm
	0 07 032	Height of sensor above marine deck platform (set to missing to cancel the previous value)

Notes:

1) The time identification refers to the beginning of the one-month period.
2) In case of precipitation measurements, the one-month period begins at 06 UTC on the first day of the month and ends at 06 UTC on the first day of the following month.
3) If the height of the sensor was changed during the period specified, the value shall be that which existed for the greater part of the period.

		Monthly normals for an ocean weather station (data of CLIMAT SHIP Section 2)
3 08 012	0 04 001	Year (of beginning of the reference period)
	0 04 001	Year (of ending of the reference period)
	0 04 002	Month
	0 04 003	Day (= 1) (1)
	0 04 004	Hour (= 0) (1)
	0 04 074	Short time displacement (= UTC – LST)(1)
	0 04 022	Time period (= 1)
		Normals of monthly mean pressure, temperature, vapour pressure and sea/water temperature
	0 08 023	First order statistics (= 4; mean value)
	0 10 051	Pressure reduced to mean sea level
	0 07 032	Height of sensor above marine deck platform (for temperature measurement)
	0 07 033	Height of sensor above water surface (for temperature measurement)
	0 12 101	Temperature/dry-bulb temperature
	0 13 004	Vapour pressure
	0 07 032	Height of sensor above marine deck platform (set to missing to cancel the previous value
	0 07 033	Height of sensor above water surface (set to missing to cancel the previous value)
	3 02 056	Sea surface temperature, method of measurement, and depth below sea surface
	0 08 023	First order statistics (= 63; missing value)
	0 04 001	Year (of beginning of the reference period)
	0 04 001	Year (of ending of the reference period)
	0 04 002	Month
	0 04 003	Day (= 1) (2)
	0 04 004	Hour (= 6) (2)
	0 04 022	Time period (= 1)
		Normals of precipitation
	0 07 032	Height of sensor above marine deck platform (for precipitation measurement)
	0 08 023	First order statistics (= 4; mean value)
	0 13 060	Total accumulated precipitation
	0 04 053	Number of days with precipitation equal to or more than 1 mm
	0 08 023	First order statistics (= 63; missing value)

Notes:
1) The time identification refers to the beginning of the one-month period.
2) In case of precipitation measurements, the one-month period begins at 06 UTC on the first day of the month and ends at 06 UTC on the first day of the following month.
3) If the height of the sensor was changed during the period specified, the value shall be that which existed for the greater part of the period.

ADD TABLE D DESCRIPTOR FOR CLIMAT TEMP AND CLIMAT TEMP SHIP DATA

		Sequence for representation CLIMAT TEMP and CLIMAT TEMP SHIP data
3 09 054	3 01 001	Identification of launch site
	0 01 011	Ship's call sign
	3 01 011	Date (1)
	3 01 012	Time(1)
	3 01 021	Horizontal and vertical coordinates
	0 07 030	Height of station ground above mean sea level
	0 07 031	Height of barometer above mean sea level
	0 07 007	Height release of sonde above mean sea level
		Monthly mean data
	0 04 023	Time period (= number of days in the month)
	0 04 059	Times of observations used to compute the reported mean values
	1 15 000	Delayed replication of 15 descriptors
	0 31 001	Delayed descriptor replication factor
	0 08 001	Vertical sounding significance
	0 08 023	First order statistics (= 4; mean value)
	0 07 004	Pressure
	0 10 009	Geopotential height
	0 12 101	Temperature/dry-bulb temperature
	0 12 103	Dew-point temperature
	0 08 023	First order statistics (= 32; vector mean)
	0 11 001	Wind direction
	0 11 002	Wind speed
	0 08 023	First order statistics (= 63; missing value)
	0 11 019	Steadiness of wind
	0 08 050	Qualifier for number of missing values in calculation of statistic (= 2; temperature)
	0 08 020	Total number of missing entities (days)
	0 08 050	Qualifier for number of missing values in calculation of statistic (= 9; wind)
	0 08 020	Total number of missing entities (days)

Note:
(1) The time identification refers to the beginning of the one-month period.

ADDITIONAL ENTRY:

Add the following new entry to existing BUFR/CREX code table 0-02-169/B-02-169 (i.e. “type of anemometer”):

3 Sonic

PROPOSED ADDITIONS TO THE EXISTING FLAG TABLE 0 08 042:

	0 08 042
Bit No.	**Extended vertical sounding significance**

14	Top of wind sounding
15	Level determined by regional decision
17	Pressure level originally indicated by height as the vertical coordinate

IN CODE TABLE 0-02-163

Change: 13, Parameter = Reserved

to:13, Parameter = IR / two WV channel ratioing method

For RADOB, TRACKOB and SAREP

I. Add descriptors

I-1 For RADOB

Class 02 - Instrumentation

0	02	160	Wave length of the radar	Code table	0	0	4	Code table	0	2

Class 19 - Synoptic features

0	19	100	Time interval to calculate the movement of the tropical cyclone	Code table	0	0	4	Code table	0	2
0	19	101	Accuracy of the position of the centre of the tropical cyclone	Code table	0	0	4	Code table	0	2
0	19	102	Shape and definition of the eye of the tropical cyclone	Code table	0	0	3	Code table	0	1
0	19	103	Diameter of major axis of the eye of the tropical cyclone	Code table	0	0	4	Code table	0	2
0	19	104	Change in character of the eye during the 30 minutes	Code table	0	0	4	Code table	0	2
0	19	105	Distance between the end of spiral band and the centre	Code table	0	0	4	Code table	0	2

I-2 For TRACKOB

Class 02 - Instrumentation

0	02	042	Indicator for sea surface current speed	Code table	0	0	2	Code table	0	1

Class 04 - Location (time)

0	04	080	Averaging period for following value	Code table	0	0	4	Code table	0	2

Class 22 - Oceanographic elements

0	22	005	Direction of sea surface current	Degree true	0	0	9	Degree true	0	3
0	22	032	Speed of sea surface current	m s^{-1}	2	0	13	m s^{-1}	2	4
0	22	049	Sea surface temperature	K	2	0	15	K	2	5
0	22	059	Sea surface salinity	Part per thousand	2	0	14	Part per thousand	2	5

I-3 For SAREP

Class 19 - Synoptic features

0	19	106	Identification number of tropical cyclone	Numeric	0	0	7	Numeric	0	3
0	19	107	Time interval of the tropical cyclone analysis	Code table	0	0	4	Code table	0	2
0	19	108	Accuracy of geographical position of the tropical cyclone	Code table	0	0	3	Code table	0	1
0	19	109	Mean diameter of the overcast	Code table	0	0	4	Code table	0	2

			cloud of the tropical cyclone							
0	19	110	Apparent 24-hour change in intensity of the tropical cyclone	Code table	0	0	4	Code table	0	2
0	19	111	Current Intensity (CI) number of the tropical cyclone	Numeric	1	0	7	Numeric	1	3
0	19	112	Data tropical (DT) number of the tropical cyclone	Numeric	1	0	7	Numeric	1	3
0	19	113	Cloud pattern type of the DT-number	Code table	0	0	4	Code table	0	2
0	19	114	Model Expected tropical (MET) number of the tropical cyclone	Numeric	1	0	7	Numeric	1	3
0	19	115	Trend of past 24-hour change (+: Developed, -: Weakened)	Numeric	1	-30	6	Numeric	1	2
0	19	116	Pattern tropical (PT) number of the tropical cyclone	Numeric	1	0	7	Numeric	1	3
0	19	117	Cloud picture type of the PT-number	Code table	0	0	3	Code table	0	1
0	19	118	Final tropical (T) number of the tropical cyclone	Numeric	1	0	7	Numeric	1	3
0	19	119	Type of the final T-number	Code table	0	0	3	Code table	0	1
0	19	150	Typhoon International Common Number (Typhoon Committee)	CCITTIA5	0	0	32	Character	0	4

Class 25 - Processing information

0	25	150	Method of tropical cyclone intensity analysis using satellite data	Code table	0	0	4	Code table	0	2

Category 01 - Location and identification sequence

3	01	005	0 01 035 0 01 034	Originating centre Identification of originating/generating sub-centre

II. Code Tables

II-1 For RADOB

0 02 160
Wave length of the radar

Code figure	
0	Reserved
1	10 to less than 20 mm
2	Reserved
3	20 to less than 40 mm
4	Reserved
5	40 to less than 60 mm
6	Reserved
7	60 to less than 90 mm
8	90 to less than 110 mm
9	110 mm and greater
10-14	Not used
15	Missing value

0 19 100
Time interval to calculate the movement of the tropical cyclone

Code figure	
0-2	Not used
3	During the preceding 15 minutes
4	During the preceding 30 minutes
5	During the preceding 1 hour

6	During the preceding 2 hours
7	During the preceding 3 hours
8	During the preceding 6 hours
9	During a period of more than 6 hours
10	Undetermined
11-14	Not used
15	Missing value

0 19 101

Accuracy of the position of the centre of the tropical cyclone

Code figure	
0	Reserved
1	Eye visible on radar scope, accuracy good (within 10 km)
2	Eye visible on radar scope, accuracy fair (within 30 km)
3	Eye visible on radar scope, accuracy poor (within 50 km)
4	Position of the centre within the area covered by the radar scope, determination by means of the spiral-band overlay, accuracy good (within 10 km)
5	Position of the centre within the area covered by the radar scope, determination by means of the spiral-band overlay, accuracy fair (within 30 km)
6	Position of the centre within the area covered by the radar scope, determination by means of the spiral-band overlay, accuracy poor (within 50 km)
7	Position of the centre outside the area covered by the radar scope, extrapolation by means of the spiral-band overlay
8-9	Reserved
10	Accuracy undetermined
11-14	Not used
15	Missing value

0 19 102

Shape and definition of the eye of the tropical cyclone

Code figure		
0	Circular	*well defined*
1	Elliptical — the minor axis is at least 3/4 the length of the major axis	*well defined*
2	Elliptical — the minor axis is less than 3/4 the length of the major axis	*well defined*
3	Apparent double eye	*well defined*
4	Other shape	*well defined*
5	Ill defined	
6	Undetermined	
7	Missing	

0 19 103

Diameter of major axis of the eye of the tropical cyclone

Code figure	
0	Less than 5 km
1	5 to less than 10 km
2	10 to less than 15 km
3	15 to less than 20 km
4	20 to less than 25 km
5	25 to less than 30 km
6	30 to less than 35 km
7	35 to less than 40 km
8	40 to less than 50 km

9	50 km and greater
10	Undetermined
11-14	Not used
15	Missing value

0 19 104
Change in character of the eye during the 30 minutes

Code figure	
0	Eye has first become visible during the past 30 minutes
1	No significant change in the characteristics or size of the eye
2	Eye has become smaller with no other significant change in characteristics
3	Eye has become larger with no other significant change in characteristics
4	Eye has become less distinct with no significant change in size
5	Eye has become less distinct and decreased in size
6	Eye has become less distinct and increased in size
7	Eye has become more distinct with no significant change in size
8	Eye has become more distinct and decreased in size
9	Eye has become more distinct and increased in size
10	Change in character and size of eye cannot be determined
11-14	Not used
15	Missing value

0 19 105
Distance between the end of spiral band and the centre

Code figure	
0	0 to less than 100 km
1	100 to less than 200 km
2	200 to less than 300 km
3	300 to less than 400 km
4	400 to less than 500 km
5	500 to less than 600 km
6	600 to less than 800 km
7	800 km or more
8-9	Reserved
10	Doubtful or undetermined
11-14	Not used
15	Missing value

II-2 For TRACKOB

0 02 042
Indicator for sea surface current speed

Code figure	
0	Value originally reported in m/s
1	Value originally reported in knots
2	No sea current data available
3	Missing

0 04 080
Averaging period for following value

Code figure	
0	Spot values
1	Less than 15 minutes

2	From 15 to 45 minutes
3	More than 45 minutes
4-8	Reserved
9	Data not available
10-14	Not used
15	Missing

II-3　For SAREP

0 19 107
Time interval of the tropical cyclone analysis

Code figure

0	Less than 1 hour
1	1 to less than 2 hours
2	2 to less than 3 hours
3	3 to less than 6 hours
4	6 to less than 9 hours
5	9 to less than 12 hours
6	12 to less than 15 hours
7	15 to less than 18 hours
8	18 to less than 21 hours
9	21 to less than 30 hours
10-14	Not used
15	Missing value

0 19 108
Accuracy of geographical position of the tropical cyclone

Code figure

0	Cyclone centre within 10 km of the transmitted position
1	Cyclone centre within 20 km of the transmitted position
2	Cyclone centre within 50 km of the transmitted position
3	Cyclone centre within 100 km of the transmitted position
4	Cyclone centre within 200 km of the transmitted position
5	Cyclone centre within 300 km of the transmitted position
6	Cyclone centre undetermined
7	Missing value

0 19 109
Mean diameter of the overcast cloud of the tropical cyclone

Code figure

0	Less than 1° of latitude
1	1° to less than 2° of latitude
2	2° to less than 3° of latitude
3	3° to less than 4° of latitude
4	4° to less than 5° of latitude
5	5° to less than 6° of latitude
6	6° to less than 7° of latitude
7	7° to less than 8° of latitude
8	8° to less than 9° of latitude
9	9° of latitude or more

10	Undetermined
11-14	Not used
15	Missing value

0 19 110

Apparent 24-hour change in intensity of the tropical cyclone

Code figure	
0	Much weakening
1	Weakening
2	No change
3	Intensification
4	Strong Intensification
5-8	Reserved
9	Not observed previously
10	Undetermined
11-14	Not used
15	Missing value

0 19 113

Cloud pattern type of the DT-number

Code figure	Type
1	Curved Band
2	Shear
3	Eye
4	Banding Eye
5	Central Dense Overcast (CDO)
6	Embedded Center
7	Center Cold Cover (CCC)
8-14	Reserved
15	Missing value

0 19 117

Cloud picture type of the PT-number

Code figure	Type
1	A (Curved Band)
2	B (CDO)
3	C (Shear)
4-6	Reserved
7	Missing value

0 19 119

Type of the final T-number

Code figure	Type
1	DT-number
2	PT-number
3	MET-number
4-6	Reserved
7	Missing value

0 25 150

Method of tropical cyclone intensity analysis using satellite data

Code figure	Method
1	The Dvorak's VIS (visual imagery) intensity analysis
2	The Dvorak's EIR (Enhanced Infrared imagery) intensity analysis
3-14	Reserved
15	Missing value

Table D descriptors which correspond with whole sequences of RADOB, TRACKOB and SAREP:

1. RADOB Template (part A: Information on tropical cyclone)

3 16 050	3 01 001	WMO block and station number
	3 01 011	Date
	3 01 012	Time
	0 02 160	Wave length of the radar
	0 08 005	Meteorological attribute significance (=1)
	0 05 002	Latitude (coarse accuracy)
	0 06 002	Longitude (coarse accuracy)
	0 08 005	Cancel Meteorological attribute significance
	0 19 100	Time interval to calculate the movement of the tropical cyclone
	0 19 005	Direction of motion of feature
	0 19 006	Speed of motion of feature
	0 19 101	Accuracy of the position of the centre of the tropical cyclone
	0 19 102	Shape and definition of the eye of the tropical cyclone
	0 19 103	Diameter of major axis of the eye of the tropical cyclone
	0 19 104	Change in character of the eye during the 30 minutes
	0 19 105	Distance between the end of spiral band and the centre

2. TRACKOB Template

<u>BUFR template</u>

3 08 010	0 01 011	Ship or mobile land station identifier
	1 13 000	Delayed replication of 13 descriptors
	0 31 001	Delayed descriptor replication factor
	3 01 011	Date
	3 01 012	Time
	3 01 021	Latitude/Longitude (high accuracy)
	0 04 080	Averaging period for following value
	0 22 049	Sea surface temperature
	0 04 080	Averaging period for following value
	0 22 059	Sea surface salinity
	0 04 080	Averaging period for following value

	0 22 005	Direction of sea surface current
	0 02 042	Indicator for sea surface current speed
	0 22 032	Speed of sea surface current
	0 02 042	Indicator for sea surface current speed (cancel)
	0 04 080	Averaging period for following value (cancel)

CREX template

D 08 010	B 01 011	Ship or mobile land station identifier
	R 13 000	Delayed replication of 13 descriptors
	D 01 011	Date
	D 01 012	Time
	D 01 021	Latitude/Longitude (high accuracy)
	B 04 080	Averaging period for following value
	B 22 049	Sea surface temperature
	B 04 080	Averaging period for following value
	B 22 059	Sea surface salinity
	B 04 080	Averaging period for following value
	B 22 005	Direction of sea surface current
	B 02 042	Indicator for sea surface current speed
	B 22 032	Speed of sea surface current
	B 02 042	Indicator for sea surface current speed (cancel)
	B 04 080	Averaging period for following value (cancel)

3. SAREP Template (part A: Information on tropical cyclone)

BUFR template

3 16 052	3 01 005	Originating centre/sub-centre
	3 01 011	Date
	3 01 012	Time
	0 01 007	Satellite identifier
	0 25 150	Satellite intensity analysis method of tropical cyclone
	1 22 000	Delayed replication of 22 descriptors
	0 31 001	Delayed descriptor replication factor
	0 01 027	WMO long storm name
	0 19 150	Typhoon International Common Number (Typhoon Committee)
	0 19 106	Identification number of tropical cyclone
	0 08 005	Meteorological attribute significance (=1)
	0 05 002	Latitude (coarse accuracy)
	0 06 002	Longitude (coarse accuracy)
	0 08 005	Cancel Meteorological attribute significance
	0 19 107	Time interval of the tropical cyclone analysis

0 19 005	Direction of motion of feature
0 19 006	Speed of motion of feature
0 19 108	Accuracy of geographical position of the tropical cyclone
0 19 109	Mean diameter of the overcast cloud of the tropical cyclone
0 19 110	Apparent 24-hour change in intensity of the tropical cyclone
0 19 111	Current Intensity (CI) number of the tropical cyclone
0 19 112	Data tropical (DT) number of the tropical cyclone
0 19 113	Cloud pattern type of the DT-number
0 19 114	Model Expected tropical (MET) number of the tropical cyclone
0 19 115	Trend of the past 24-hour change (+: Developed, -: Weakened)
0 19 116	Pattern tropical (PT) number of the tropical cyclone
0 19 117	Cloud picture type of the PT-number
0 19 118	Final tropical (T) number of the tropical cyclone
0 19 119	Type of the final T-number

CREX template

D 16 052	D 01 005	Originating centre/sub-centre
	D 01 011	Date
	D 01 012	Time
	B 01 007	Satellite identifier
	B 25 150	Satellite intensity analysis method of tropical cyclone
	R 22 000	Delayed replication of 22 descriptors
	B 01 027	WMO long storm name
	B 19 150	Typhoon International Common Number (Typhoon Committee)
	B 19 106	Identification number of tropical cyclone
	B 08 005	Meteorological attribute significance (=1)
	B 05 002	Latitude (coarse accuracy)
	B 06 002	Longitude (coarse accuracy)
	B 08 005	Cancel Meteorological attribute significance
	B 19 107	Time interval of the tropical cyclone analysis
	B 19 005	Direction of motion of feature
	B 19 006	Speed of motion of feature
	B 19 108	Accuracy of geographical position of the tropical cyclone
	B 19 109	Mean diameter of the overcast cloud of the tropical cyclone
	B 19 110	Apparent 24-hour change in intensity of the tropical cyclone
	B 19 111	Current Intensity (CI) number of the tropical cyclone
	B 19 112	Data tropical (DT) number of the tropical cyclone
	B 19 113	Cloud pattern type of the DT-number
	B 19 114	Model Expected tropical (MET) number of the tropical cyclone
	B 19 115	Trend of the past 24-hour change (+: developed, -: weakened)
	B 19 116	Pattern tropical (PT) number of the tropical cyclone
	B 19 117	Cloud picture type of the PT-number

B 19 118 Final tropical (T) number of the tropical cyclone
B 19 119 Type of the final T-number

For SIGMET:

Proposed Table B entries

Table Reference	Element name	BUFR				CREX		
F X Y		Unit	Scale	Ref. value	Data width	Unit	Scale	Data width
0 01 037	SIGMET sequence identifier	CCITT IA5	0	0	24	Character	0	3
0 01 065	ICAO region identifier	CCITT IA5	0	0	256	Character	0	32
0 08 019	Qualifier for following centre identifier	Code table	0	0	4	Code table	0	2
0 08 079	Product status	Code table	0	0	4	Code table	0	2
0 10 064	SIGMET cruising level	Code table	0	0	3	Code table	0	1
0 20 028	Expected change in intensity	Code table	0	0	3	Code table	0	1

Add the following new categories to Table A within BUFR and CREX:

13 Forecasts
14 Warnings

Add the following new code table values for BUFR/CREX Table B descriptors:

0 08 011
21 Thunderstorm
22 Tropical Cyclone
23 Mountain Wave
24 Duststorm
25 Sandstorm

0 20 008
15 Obscured (OBSC)
16 Embedded (EMBD)

0 20 024
5 Severe

Code tables for proposed new Table B descriptors:

Code	**0 08 019**

figure	**Qualifier for following centre identifier**
0	Reserved
1	ATS (Air Traffic Service) unit serving FIR (Flight Information Region)
2	FIR (Flight Information Region)
3	UIR (Upper Information Region)
4	CTA (Control Area)
5	VAAC (Volcanic Ash Advisory Centre)
6	MWO (Meteorological Watch Office) issuing SIGMET
7-14	Reserved
15	Missing value

Code figure	**0 08 079** **Product status**
0	NORMAL ISSUE
1	CORRECTION TO A PREVIOUSLY ISSUED PRODUCT (**COR**)
2	AMENDMENT TO A PREVIOUSLY ISSUED PRODUCT (**AMD**)
3	CORRECTION TO A PREVIOUSLY ISSUED AMENDED PRODUCT (**COR AMD**)
4	CANCELLATION OF A PREVIOUSLY ISSUED PRODUCT (**CNL**)
5	NO PRODUCT AVAILABLE (**NIL**)
6-14	RESERVED
15	MISSING

Code figure	**0 10 064** **SIGMET cruising level**
0	Subsonic
1	Transonic
2	Supersonic
3-6	Reserved
7	Missing value

Code figure	**0 20 028** **Expected change in intensity**
0	No change (NC)
1	Forecast to weaken (WKN)
2	Forecast to intensify (INTSF)
3	Unknown (*)
4-6	Reserved
7	Missing value

Note: (*) This entry is not allowed in SIGMET messages.

New Table D descriptors:

		(Time period)
3 01 014	1 02 002	Replication of 2 descriptors 2 times
	3 01 011	Year, Month, Day
	3 01 012	Hour, Minute
		(Description of a feature in 3-D or 2-D)
3 01 027	0 08 007	Dimensional significance, 0=Point, 1=Line, 2=Area, 3=Volume

	1 01 000	Delayed replication of 1 descriptor
	0 31 001	Replication factor [2]
	3 01 028	Description of horizontal section
	0 08 007	Dimensional significance, Missing=Cancel
		(Horizontal section of a feature described as a polygon, circle, line or point)
3 01 028	0 08 040	Flight level significance
	0 33 042	Type of limit represented by following (flight level) value
	0 07 010	Flight level
	1 01 000	Delayed replication of 1 descriptor
	0 31 002	Extended replication factor [3]
	3 01 023	Location
	0 19 007	Radius of feature [4]
	0 08 040	Flight level significance, Missing=Cancel

[2] This replication factor shall have a value of “1” when a 2-D feature is being described, whereas 3-D features may be described via any one of the following methods:

(a) Via two or more horizontal sections in successive ascending flight levels. In this case, each section shall be described by an identical number of latitude/longitude points listed in identical order (i.e. where each point x of section n is to be joined via a straight line to point x of section n+1), in order to ensure that the overall shape of the 3-D feature is unambiguously described. In this case, all values reported for 0 33 042 shall be “missing”.

(b) Via a single horizontal section with an appropriate value reported for 0 33 042, as follows. In all such cases, the corresponding horizontal section description applies throughout the entire region.

a. A value of “0” to indicate a region above (but not including) the reported flight level and with unspecified upper bound.

b. A value of “1” to indicate a region above (and including) the reported flight level and with unspecified upper bound.

c. A value of “2” to indicate a region below (but not including) the reported flight level and extending to the surface.

d. A value of “3” to indicate a region below (and including) the reported flight level and extending to the surface.

(c) Via two replications of the same horizontal section at the same reported flight level, in order to indicate a region extending both below and above (and including!) the reported flight level. In this case, the values reported for the two replications of 0 33 042 shall be as follows:

a. Values of “3” and “1”, respectively, to indicate a region beginning from below a reported flight level, but continuing through that level upward to some unspecified point above (e.g. TOP ABV FL100).

b. Values of “1” and “3”, respectively, to indicate a region beginning from above a reported flight level, but continuing through that level downward to some unspecified point below (e.g. CIGS BLW FL010).

[3] This replication factor shall have a value of “1” when a circle or point is being described, and it shall have a value of “2” when a line is being described. A polygon, on the other hand, shall be described via a sequence of three or more contiguous points in accordance with the note to code table 0 08 007.

[4] The value reported for 0 19 007 shall be “missing” unless the horizontal section being described is a circle.

		(SIGMET header)
3 16 030	3 01 014	Time period (for which SIGMET is valid)
	0 01 037	SIGMET sequence identifier
	0 10 064	SIGMET cruising level
	0 08 019	Qualifier for location identifier, 1=ATS unit serving FIR
	0 01 062	Short ICAO location identifier
	0 08 019	Qualifier for location identifier, 2=FIR, 3=UIR, 4=CTA
	0 01 065	ICAO region identifier
	0 08 019	Qualifier for location identifier, 6=MWO
	0 01 062	Short ICAO location identifier
	0 08 019	Qualifier for location identifier, Missing=Cancel

		(SIGMET, Observed or forecast location and motion)
3 16 031	0 08 021	Time Significance, 16=Analysis, 4=Forecast
	3 01 011	Year, Month, Day
	3 01 012	Hour, Minute
	3 01 027	Description of feature
	0 19 005	Direction of motion
	0 19 006	Speed of motion
	0 20 028	Expected change in intensity
	0 08 021	Time significance, Missing=Cancel
		(SIGMET, Forecast position)
3 16 032	0 08 021	Time Significance, 4=Forecast
	3 01 011	Year, Month, Day
	3 01 012	Hour, Minute
	3 01 027	Description of feature
	0 08 021	Time significance, Missing=Cancel
		(SIGMET, Outlook)
3 16 033	0 08 021	Time Significance, 4=Forecast
	3 01 011	Year, Month, Day
	3 01 012	Hour, Minute
	1 01 000	Delayed replication of 1 descriptor
	0 31 001	Replication factor
	3 01 027	Description of feature
	0 08 021	Time significance, Missing=Cancel

		(Volcanic Ash SIGMET)
3 16 034	0 08 079	Product status, 0=Normal Issue, 1=Correction
	3 16 030	SIGMET Header
	0 08 011	Meteorological feature, 17=Volcano
	0 01 022	Name of feature
	0 08 007	Dimensional significance, 0=Point
	3 01 023	Location
	0 08 007	Dimensional significance, Missing=Cancel
	0 20 090	Special Clouds, 5=Clouds from volcanic eruptions
	3 16 031	SIGMET Observed or forecast location and motion
	1 01 000	Delayed replication of 1 descriptor
	0 31 000	Short replication factor
	3 16 032	SIGMET Forecast position

	1 01 000	Delayed replication of 1 descriptor
	0 31 001	Replication factor
	3 16 033	SIGMET Outlook
	0 08 011	Meteorological feature, Missing=Cancel
	0 08 079	Product status, Missing=Cancel
		(Thunderstorm SIGMET)
3 16 035	0 08 079	Product status, 0=Normal Issue, 1=Correction
	3 16 030	SIGMET Header
	0 08 011	Meteorological feature, 21=Thunderstorm
	0 20 023	Other weather phenomenon, bit 2=Squalls or all 18 bits = Missing
	0 20 021	Type of precipitation, bit 14=Hail or all 30 bits=Missing
	0 20 008	Cloud distribution 15=OBSC, 16=EMBD, 12=FRQ, 31=Missing
	3 16 031	SIGMET Observed or forecast location and motion
	0 08 011	Meteorological feature, Missing=Cancel
	0 08 079	Product status, Missing=Cancel

		(Tropical Cyclone SIGMET)
3 16 036	0 08 079	Product status, 0=Normal Issue, 1=Correction
	3 16 030	SIGMET Header
	0 08 011	Meteorological feature, 22=Tropical Cyclone
	0 01 027	WMO storm name
	3 16 031	SIGMET Observed or forecast location and motion
	1 01 000	Delayed replication of 1 descriptor
	0 31 000	Short replication factor
	3 16 032	SIGMET Forecast position
	1 01 000	Delayed replication of 1 descriptor
	0 31 001	Replication factor
	3 16 033	SIGMET Outlook
	0 08 011	Meteorological feature, Missing=Cancel
	0 08 079	Product status, Missing=Cancel

		(Turbulence SIGMET)
3 16 037	0 08 079	Product status, 0=Normal Issue, 1=Correction
	3 16 030	SIGMET Header
	0 08 011	Meteorological feature, 13=Turbulence
	0 11 031	Degree of turbulence, 10=Moderate, 11=Severe
	3 16 031	SIGMET Observed or forecast location and motion
	0 08 011	Meteorological feature, Missing=Cancel
	0 08 079	Product status, Missing=Cancel
		(Icing SIGMET)
3 16 038	0 08 079	Product status, 0=Normal Issue, 1=Correction
	3 16 030	SIGMET Header
	0 08 011	Meteorological feature, 15=Airframe Icing
	0 20 041	Airframe icing, 7=Severe
	0 20 021	Type of precipitation, bit 3=Liquid freezing or all 30 bits = Missing
	3 16 031	SIGMET Observed or forecast location and motion
	0 08 011	Meteorological feature, Missing=Cancel
	0 08 079	Product status, Missing=Cancel
		(Mountain Wave, Duststorm or Sandstorm SIGMET)

3 16 039	0 08 079	Product status, 0=Normal Issue, 1=Correction
	3 16 030	SIGMET Header
	0 08 011	Meteorological feature, 23=MountainWave, 24=Duststorm, 25=Sandstorm
	0 20 024	Intensity of phenomena, 3=Heavy, 5=Severe
	3 16 031	SIGMET Observed or forecast location and motion
	0 08 011	Meteorological feature, Missing=Cancel
	0 08 079	Product status, Missing=Cancel

		(Cancellation of SIGMET)
3 16 040	3 16 030	SIGMET header
	0 08 079	Product status, 4=Cancellation
	3 01 014	Time period (of the SIGMET to be cancelled)
	0 01 037	SIGMET sequence identifier (of the SIGMET to be cancelled)
	0 10 064	SIGMET cruising level (of the SIGMET to be cancelled)
	0 08 079	Product status, Missing=Cancel

FOR POLLUTANT

Add the following new entry to BUFR/CREX Class 15:

TABLE REFERENCE			TABLE ELEMENT NAME	BUFR				CREX		
F	X	Y		UNIT	SCALE	REFERENCE VALUE	DATA WIDTH (Bits)	UNIT	SCALE	DATA WIDTH (Characters)
0	15	027	Concentration of pollutant	Kg m^{-3}	9	0	10	Kg m^{-3}	9	4

Add the following new entries to existing BUFR/CREX code table 0-15-025/B-15-025 (i.e. "type of pollutant"):

11 Fine particulate matter (diameter < 2.5 microns)

12 Fine particulate matter (diameter < 10 microns)

Correct the following typographical errors in the English version of the current WMO Manual 306, Part B for BUFR/CREX Class 15:

- *For both 0-15-025 and 0-15-026, the "ELEMENT NAME" contains the word "pollutant" misspelled as "polluant".*

The units of 0-15-026 should be "mol mol^{-1}" (i.e. one included space) rather than "$molmol^{-1}$", which seems to imply the reciprocal of some heretofore-unknown unit of measure!

REPRESENTATION OF NOMINAL VALUES

TO REPRESENT ANY NOMINAL VALUE IN BURF A NEW DESCRIPTOR IN CLASS 8 OF THE BURF TABLE B IS TO BE USED TO INDICATE THE CAUSE OF NOMINAL VALUE.

Ref number	Name	Unit	Scale	Reference	Data width
008083	Nominal value indicator	Flag table	0	0	15

008083 Nominal value indicator

Bit No.	Meaning
1	Adjusted with respect to representative height of sensor above local ground (or Deck of marine platform)
2	Adjusted with respect to representative height of sensor above water surface
3	Adjusted with respect to standard surface roughness
4	Adjusted with respect to wind speed
5	Adjusted with respect to temperature
6	Adjusted with respect to pressure
7	Adjusted with respect to humidity
8	Adjusted with respect to evaporation
9	Adjusted with respect to wetting losses
10-14	Reserved
All 15	Missing value

ADD THE FOLLOWING NEW ENTRIES TO BUFR/CREX CLASS 0:

0 00 004	X Master Table (see Note (2))	T IA5 acter	0 0	0	16 2
0 00 006	r Table Version Number (see Note (3))	T IA5 acter	0 0	0	16 2
0 00 007	r Table Version Number (see Note (4))	T IA5 acter	0 0	0	16 2
0 00 008	Table Version Number (see Note (5))	T IA5 acter	0 0	0	16 2

<u>Add the following new notes to BUFR/CREX Class 0:</u>

(2) Master Tables are described in Note (2) to Section 1 of the BUFR regulations.

(3) BUFR Master Table Version Numbers are described in Notes (2) and (4) to Section 1 of the BUFR regulations for edition 3, and in Notes (2) and (5) to Section 1 of the BUFR regulations for edition 4.

(4) CREX Master Table Version Numbers are described in Note (1) to Section 1 of the CREX regulations.

(5) Local Table version number (see Note (2) to Section 1 of the BUFR regulations

<u>Revise Note (2) under Section 1 of the BUFR regulations (for both editions 3 and 4) to read:</u>

A BUFR master table may be defined for a scientific discipline other than meteorology. This shall be indicated by a non-zero numeric value in octet 4. Such a table will be developed, in coordination with the ET/DR+C, when a

recognized organization exists with the necessary expertise to maintain such a master table, and when at least one of the following situations also exists:

— Requirements cannot be met using Master Table 0.
— There is expected to be a minimal amount of overlap with respect to the entries in Master Table 0.

The current list of master tables, along with their associated values in octet 4, is as follows:

0Meteorology maintained by World Meteorological Organization (WMO)
10Oceanography maintained by International Oceanographic Commission (IOC)

Whenever a new master table is developed, the following criteria shall apply:

— Table C may not be changed, nor may Classes 00 and 31 of Table B. These would remain identical for any of the master tables.
— For Classes 01 through 09 (coordinate classes) and Class 33 of Table B, and for Categories 00 and 01 of Table D, these Classes and Categories must have the same name and be used for the same types of descriptors as in Master Table 0; however, individual descriptors within these Classes and Categories would be left to the discretion of the organization defining the particular master table in question.
— For Table A and all remaining Classes of Table B and Categories of Table D, these would be left to the discretion of the organization defining the particular master table in question.

For all master tables (including Master Table 0):

— Each revision of the master table shall be given a new version number.
— Local tables shall define those parts of the master table which are reserved for local use, thus version numbers of local tables may be changed at will by the originating centre.

Revise octet 11 under Section 1 of the BUFR regulations for edition 3 to read:

11 Version number of master table used – see Notes (2) and (4)

Revise octet 14 under Section 1 of the BUFR regulations for edition 4 to read:

14 Version number of master table used – see Notes (2) and (5)

Add the following as new Note (4) under Section 1 of the BUFR regulations for edition 3 (and as new Note (5) for edition 4):

For Master Table 0, the master table version numbers are as follows:

0 Experimental
1 Version implemented on 1 November 1988
2 Version implemented on 1 November 1993
3 Version implemented on 2 November 1994
4 Version implemented on 8 November 1995
5 Version implemented on 6 November 1996

6 Version implemented on 5 November 1997
7 Version implemented on 4 November 1998
8 Version implemented on 3 May 2000
9 Version implemented on 8 November 2000
10 Version implemented on 7 November 2001
11 Version implemented on 5 November 2003
12 Version implemented on 2 November 2005
13 Pre-operational to be implemented by next amendment

Change vv definition in CREX Section 1 Edition 1 and Edition 2 to:
vv: CREX Master Table version number (see Note 1)

Change bb definition in CREX Section 1 Edition 2 to:
bb: BUFR Master Table version number (see Note (5) under Section 1 of the BUFR regulations for Edition 4)

Add the following as new Note (1) under Section 1 of the CREX regulations:

For Master Table 0, the master table version numbers are as follows:

0 Experimental
1 Version implemented on 3 May 2000
2 Version implemented on 7 November 2001
3 Version implemented on 4 November 2003
4 Version implemented on 2 November 2005
5 Pre-operational to be implemented by next amendment

FOR ENCODING MORE SATELLITE DATA:

Add class in BUFR Table B — Classification of elements:

0	40	Satellite data

Add a new Category of sequences in BUFR Table D:

3	40	Additional satellite report sequences

For data of ENVISAT Satellite:

Add:

021093 Ku band peakiness numeric 3 0 16
021094 S band peakines numeric 3 0 16

Flag table 033047 " Measurement confidence data " should be amended with the addition of:

Bit number	Meaning
8	S band anomaly error detected

NEW CODE TABLE ENTRIES FOR POLAR SATELLITE DATA

1 MHS

The MHS instrument replaces the AMSU-B instrument in the ATOVS package operated by EUMETSAT and NOAA. The level 1b data from the MHS can be represented in BUFR using exactly the same sequence of descriptors, which was used for AMSU-B.

The following changes are required to standardize the representation of MHS data:

Code Table 0-02-048
Add: 11, Parameter = MHS
Change: 11 to 14, Parameter = Reserved
to:12 to 14, Parameter = Reserved

Code Table 0-02-150
Change: 43, Parameter = AMSU-B 1
to:43, Parameter = AMSU-B 1 / MHS 1
Change: 44, Parameter = AMSU-B 2
to:44, Parameter = AMSU-B 2 / MHS 2

Change: 45, Parameter = AMSU-B 3
to:45, Parameter = AMSU-B 3 / MHS 3
Change: 46, Parameter = AMSU-B 4
to:46, Parameter = AMSU-B 4 / MHS 4
Change: 47, Parameter = AMSU-B 5
to:47, Parameter = AMSU-B 5 / MHS 5

Code Table 0-02-151
Add: 9, Parameter = MHS
Change: 8 to 2046, Parameter = Reserved
to:10 to 2046, Parameter = Reserved

Sequence Descriptor 3-10-010
Change:Title = "ATOVS AMSU-B report"
to:Title = "ATOVS AMSU-B / MHS report"

2 IASI

The IASI instrument is a hyperspectral sounder, which will fly on the Metop spacecraft operated by EUMETSAT. The level 1c data from IASI will be exchanged in BUFR. The details of the representation of the data have been discussed by many parties (ECMWF, UK Met Office, NOAA, MeteoFrance, DWD) in great detail and presented at several international meetings (including the 14th International TOVS Study Conference in Beijing). Synthetic

IASI data are being generated in near real time by NOAA using the descriptors proposed here. These data have been successfully encoded and decoded by independent software.

THE NEW ELEMENT AND SEQUENCE DESCRIPTORS GIVEN HERE ARE FROM THE RANGE OF LOCAL VALUES AND ARE SHOWN IN PARENTHESES. IT IS PROPOSED TO ASSIGN DESCRIPTORS FROM CLASSES AND CATEGORIES 40, 41 AND 42 OF BURF TABLES B AND D.

The following changes are required to standardize the representation of IASI data:

New Sequence Descriptor (3-40-001): " IASI Level 1c data"

0-01-007	Satellite identifier
0-01-031	Identification of originating/generating centre
0-02-019	Satellite instruments
0-02-020	Satellite classification
0-04-001	Year
0-04-002	Month
0-04-003	Day
0-04-004	Hour
0-04-005	Minute
2-02-131	Add 3 to scale
2-01-138	Add 10 to width
0-04-006	Second
2-01-000	Reset width
2-02-000	Reset scale
0-05-001	Latitude (high accuracy)
0-06-001	Longitude (high accuracy)
0-07-024	Satellite zenith angle
0-05-021	Bearing or azimuth
0-07-025	Solar zenith angle
0-05-022	Solar azimuth
0-05-043	Field of view number
0-05-040	Orbit number
2-01-133	Add 5 to width
0-05-041	Scan line number
2-01-000	Reset width
2-01-132	Add 4 to width
0-25-070	Major frame count
2-01-000	Reset width
2-02-126	Subtract 2 from scale
0-07-001	Height of station
2-02-000	Reset scale
(0-33-060)	GQisFlagQual
(0-33-061)	QGisQualIndex
(0-33-062)	QGisQualIndexLoc
(0-33-063)	QGisQualIndexRad
(0-33-064)	QGisQualIndexSpect
(0-33-065)	GQisSysTecSondQual
1-01-010	Repeat next 1 descriptor 10 times
(3-40-002)	IASI Level 1c band description
1-01-087	Repeat next 1 descriptor 87 times
(3-40-003)	IASI Level 1c 100 channel sequence
0-02-019	Satellite instruments
0-25-051	AVHRR channel combination

1-01-007 Repeat next 1 descriptor 7 times
(3-40-004) IASI Level 1c AVHRR single scene sequence

New Sequence Descriptor: (3-40-002) "IASI Level 1c band description"

(0-25-140) Start channel
(0-25-141) End channel
(0-25-142) Channel scale factor

New Sequence Descriptor: (3-40-003) " IASI Level 1c 100 channel sequence"

1-04-100 Repeat next 4 descriptor 100 times
2-01-136 Add 8 to width
0-05-042 Channel number
2-01-000 Reset width
(0-14-046) Scaled IASI radiance

New Sequence Descriptor: (3-40-004) " IASI Level 1c AVHRR single scene sequence"

(0-05-060) Y angular position from centre of gravity
(0-05-061) Z angular position from centre of gravity
0-25-085 Fraction of clear pixels in HIRS FOV
1-05-006 Repeat next 5 descriptor 6 times
0-05-042 Channel number
(0-25-142) Channel scale factor
(0-14-047) Scaled mean AVHRR radiance
(0-25-142) Channel scale factor
(0-14-048) Scaled std dev AVHRR radiance

New Element Descriptors:

Descriptor	Name	Units	Scale	Reference	Width
(0-05-060)	Y angular position from centre of gravity	Degree	6	-8000000	24
(0-05-061)	Z angular position from centre of gravity	Degree	6	-8000000	24
(0-14-046)	Scaled IASI radiance	$Wm^{-2}sr^{-1}m^{-1}$	0	-5000	16
(0-14-047)	Scaled mean AVHRR radiance	$Wm^{-2}sr^{-1}m^{-1}$	0	0	31
(0-14-048)	Scaled std dev AVHRR radiance	$Wm^{-2}sr^{-1}m^{-1}$	0	0	31
(0-25-140)	Start channel	Numeric	0	0	14
(0-25-141)	End channel	Numeric	0	0	14
(0-25-142)	Channel scale factor	Numeric	0	0	6
(0-33-060)	GqisFlagQual - individual IASI-System quality flag	Code Table	0	0	2
(0-33-061)	GqisQualIndex - indicator for instrument noise performance (contributions from spectral and radiometric)	%	0	0	7
(0-33-062)	GqisQualIndexLoc - indicator for geometric quality index	%	0	0	7
(0-33-063)	GqisQualIndexRad - indicator for instrument noise performance contributions from radiometric calibration)	%	0	0	7

(0-33-064)	GqisQualIndexSpect - indicator for instrument noise performance (contributions from spectral calibration)	%	0	0	7
(0-33-065)	GqisSysTecSondQual - output of system TEC (Technical Expertise Centre) quality function	Numeric	0	0	24

New Code Table (0-33-060) "GQisFlagQual - individual IASI-System quality flag"

0, Parameter = Good
1, Parameter = Bad
2, Parameter = Reserved
3, Parameter = Missing

3 ASCAT

EUMETSAT will produce level 1b ASCAT products at its headquarters in Darmstadt, Germany. These data will be encoded in BUFR and disseminated via EUMETCast (DVB satellite multicast service) and on the GTS. EUMETSAT's Ocean and Sea Ice Satellite Application Facility (OSI-SAF), hosted by KNMI, will produce level 2 products from the level 1b data. It is also foreseen to add soils moisture to the level 2 ASCAT product in the future.

The new element and sequence descriptors given here have been developed by close co-operation between EUMETSAT, the OSI-SAF and the ASCAT Science Advisory Group (SAG). The proposed sequence will accommodate both the level 1b and the level 2 data simultaneously. When the level 1b data leave EUMETSAT, the parts of the sequence relating to level 2 processing will be set to "missing". This approach will allow users to ingest the same sequence, whether they are receiving level 1b data or level 2 data.

The new element and sequence descriptors are from the range of local values and are shown in parentheses. It is proposed to assign descriptors from Classes and Categories 40, 41 and 42 of BUFR Tables B and D within Master Tables 0, as per Section 3.5 of the Final Report of the 2004 meeting of the ET/DR&C.

The following changes are required to standardize the representation of ASCAT data:

New Sequence Descriptor: (3-12-061) "ASCAT Level 1b and level 2 data sequence"

(3-12-058) ASCAT level 1b data
(3-12-060) Scatterometer soil moisture data
(3-12-059) Scatterometer wind data

New Sequence Descriptor: (3-12-058) "ASCAT level 1b data sequence"

(3-01-125) ASCAT header information
3-01-011 Date information
3-01-013 Time information
3-01-021 Position information
(3-12-055) ASCAT level 1b cell information
(0-21-150) Beam co-location
1-01-003 Repeat next 1 descriptor 3 times
(3-21-030) ASCAT sigma-0 information

New Sequence Descriptor: (3-12-060) "Scatterometer soil moisture data sequence"

0-25-060	Software identification
(0-25-062)	Database identification
(0-40-001)	Surface soil moisture (ms)
(0-40-002)	Estimated error in surface soil moisture
0-21-062	Extrapolated backscatter at 40deg incidence angle (sigma0_40)
(0-21-151)	Estimated error in sigma0 at 40deg incidence angle
(0-21-152)	Slope at 40deg incidence angle
(0-21-153)	Estimated error in slope at 40deg incidence angle
(0-21-154)	Soil moisture sensitivity
0-21-062	Dry backscatter
(0-21-088)	Wet backscatter
(0-40-003)	Mean surface soil moisture
(0-40-004)	Rain fall detection
(0-40-005)	Soil moisture correction flag
(0-40-006)	Soil moisture processing flag
(0-40-007)	Soil moisture quality
0-20-065	Snow cover
(0-40-008)	Frozen land surface fraction
(0-40-009)	Inundation and wetland fraction
(0-40-010)	Topographic complexity

New Sequence Descriptor: (3-12-059) "Scatterometer wind data sequence"

(3-12-056)	Scatterometer wind cell information
1-01-000	Delayed replication of next 1 descriptor
0-31-001	Delayed replication factor
(3-12-057)	Ambiguous wind data

New Sequence Descriptor: (3-01-125) "ASCAT header information sequence"

0-01-033	Identification of originating/generating centre
0-01-034	Identification of originating/generating sub-centre
0-25-060	Software identification
0-01-007	Satellite identifier
0-02-019	Satellite instruments
0-01-012	Direction of motion of moving observing platform

New Sequence Descriptor: (3-12-055) " ASCAT level 1b cell information"

0-05-033	Pixel size on horizontal-1
0-05-040	Orbit number
0-06-034	Cross track cell number
(0-10-095)	Height of atmosphere used
(0-21-157)	Loss per unit length of atmosphere used

New Sequence Descriptor: (3-21-030) "ASCAT sigma-0 information"

(0-08-085)	Beam identifier
2-02-129	Increase scaling by 10^1
2-01-131	Increase data width by 3 bits
0-02-111	Radar incidence angle
2-01-000	Cancel change data width

2-02-000 Cancel change scaling
0-02-134 Antenna beam azimuth
0-21-062 Backscatter
0-21-063 Radiometric resolution (noise value)
(0-21-158) ASCAT kp estimate quality
(0-21-159) ASCAT sigma-0 usability
(0-21-160) ASCAT synthetic data quality
(0-21-161) ASCAT synthetic data quantity
(0-21-162) ASCAT satellite orbit and attitude quality
(0-21-163) ASCAT solar array reflection contamination
(0-21-164) ASCAT telemetry presence and quality
(0-21-165) ASCAT extrapolated reference function
(0-21-166) ASCAT land fraction

New Sequence Descriptor: (3-12-056) "Scatterometer wind cell information sequence"

0-25-060 Software identification
0-01-032 Generating application
0-11-082 Model wind speed at 10 m
0-11-081 Model wind direction at 10 m
(0-20-095) Ice probability
(0-20-096) Ice age (a-parameter)
(0-21-155) Wind vector cell quality
2-01-133 Increase data width by 5 bits
0-21-101 Number of vector ambiguities
0-21-102 Index of selected wind vector
2-01-000 Cancel change data width

New Sequence Descriptor: (3-12-057) "Ambiguous wind data"

2-01-130 Increase data width by 2 bits
2-02-129 Increase scaling by 10^1
0-11-012 Wind speed at 10 m
2-02-000 Cancel change scaling
2-01-000 Cancel change data width
2-01-131 Increase data width by 3 bits
2-02-129 Increase scaling by 10^1
0-11-011 Wind direction at 10 m
2-02-000 Cancel change scaling
2-01-000 Cancel change data width
(0-21-156) Backscatter distance
0-21-104 Likelihood computed for solution

New Element Descriptors:

Descriptor	Name	Units	Scale	Reference	Width
(0-10-095)	Height of atmosphere used	m	0	0	16
(0-08-085)	Beam identifier	Code table	0	0	3
(0-20-095)	Ice probability	Numeric	3	0	10
(0-20-096)	Ice age ("A" parameter)	dB	2	-4096	13
(0-21-088)	Wet backscatter	dB	2	-5000	13
(0-21-150)	Beam collocation	Code table	0	0	2
(0-21-151)	Estimated error in sigma0 at 40deg incidence angle	dB	2	0	9

Descriptor	Name	Units	Scale	Reference	Width
(0-21-152)	Slope at 40deg incidence angle	dB/Deg	2	-80	7
(0-21-153)	Estimated error in slope at 40deg incidence angle	dB/Deg	2	-40	6
(0-21-154)	Soil moisture sensitivity	dB	2	0	12
(0-21-155)	Wind vector cell quality	Flag table	0	0	24
(0-21-156)	Backscatter distance	Numeric	1	-4096	13
(0-21-157)	Loss per unit length of atmosphere used	dB m-1	10	0	22
(0-21-158)	ASCAT kp estimate quality	Code table	0	0	2
(0-21-159)	ASCAT sigma-0 usability	Code table	0	0	2
(0-21-160)	ASCAT use of synthetic data	Numeric	3	0	10
(0-21-161)	ASCAT synthetic data quality	Numeric	3	0	10
(0-21-162)	ASCAT satellite orbit and attitude quality	Numeric	3	0	10
(0-21-163)	ASCAT solar array reflection contamination	Numeric	3	0	10
(0-21-164)	ASCAT telemetry presence and quality	Numeric	3	0	10
(0-21-165)	ASCAT extrapolated reference function presence	Numeric	3	0	10
(0-21-166)	ASCAT land fraction	Numeric	3	0	10
(0-25-062)	Database identification	Numeric	0	0	14
(0-40-001)	Surface soil moisture (ms)	%	1	0	10
(0-40-002)	Estimated error in surface soil moisture	%	1	0	10
(0-40-003)	Mean surface soil moisture	Numeric	3	0	10
(0-40-004)	Rain fall detection	Numeric	3	0	10
(0-40-005)	Soil moisture correction flag	Flag table	0	0	8
(0-40-006)	Soil moisture processing flag	Flag table	0	0	16
(0-40-007)	Soil moisture quality	%	1	0	10
(0-40-008)	Frozen land surface fraction	%	1	0	10
(0-40-009)	Inundation and wetland fraction	%	1	0	10
(0-40-010)	Topographic complexity	%	1	0	10

New Code Table (0-08-085) "Beam identified"

0, Parameter = Fore beam

1, Parameter = Mid beam

2, Parameter = Aft beam

3 to 6, Parameter = Reserved

7, Parameter = Missing

New Code Table (0-21-150) "Beam co-location"

0, Parameter = Data from single ground station (no co-location)

1, Parameter = Data from multiple ground station (co-located data)

2, Parameter = Reserved

3, Parameter = Missing

New Flag Table (0-21-155) "Wind vector cell quality"

Bit 1: Not enough good sigma-0 available for wind retrieval

Bit 2: Poor azimuth diversity among sigma-0 for wind retrieval

Bit 3: Any beam noise content above threshold

Bit 4: Product monitoring not used

Bit 5: Product monitoring flag

Bit 6: KNMI quality control fails

Bit 7: Variational quality control fails
Bit 8: Some portion of wind vector cell is over land
Bit 9: Some portion of wind vector cell is over ice
Bit 10: Wind retrieval not performed for wind vector cell
Bit 11: Reported wind speed is greater than 30 m/s
Bit 12: Reported wind speed is less than or equal to 3 m/s
Bit 13: Rain flag for the wind vector cell is not usable
Bit 14: Rain flag algorithm detects rain
Bit 15: No meteorological background used
Bit 16: Data are redundant
Bit 17-23: Reserved
All 24: Missing

New Code Table (0-21-158) "ASCAT KP quality estimate"
0, Parameter = Acceptable
1, Parameter = Not acceptable
2, Parameter = Reserved
3, Parameter = Missing

New Code Table (0-21-159) "ASCAT sigma-0 usability"
0, Parameter = Good
1, Parameter = Usable
2, Parameter = Bad
3, Parameter = Missing

New Flag Table (0-40-005) "Soil moisture correction flags"
Bit 1:Soil moisture between -20% and 0%
Bit 2: Soil moisture between 100% and 120%
Bit 3: Correction of wet backscatter reference
Bit 4: Correction of dry backscatter reference
Bit 5: Correction of volume scattering in sand
Bits 6-7: Reserved
All 8: Missing

New Flag Table (0-40-006) "Soil moisture processing flags"
Bit 1: Not soil
Bit 2: Sensitivity to soil moisture below limit
Bit 3: Azimuthal noise above limit
Bit 4: Backscatter Fore-Aft beam out of range
Bit 5: Slope Mid-Fore beam out of range
Bit 6: Slope Mid-Aft beam out of range
Bit 7: Soil moisture below -20%
Bit 8: Soil moisture above 120%
Bits 9-16: Reserved

Code Table 0-02-048

Add: 12, Parameter = ASCAT
Change: 12 to 14, Parameter = Reserved
to:13 to 14, Parameter = Reserved

ADDITION IN CODE TABLE 0 02 152 SATELLITE INSTRUMENT DATA USED IN PROCESSING

12 Multi-channel scanning radiometer

ADD THE FOLLOWING TABLE B ENTRY FOR NUMERICAL MODEL IDENTIFIER:

0 01 030Numerical model identifier, CCITTIA5, Scale=0, Reference=0,Data bit width=128

Note: The value of this feature could be a string of characters which contains the name of the model and other useful elements such as the model mesh.

"EDITORIAL" CORRECTIONS

1. Compression of CCITT IA5 elements

Current version of regulation 94.6.3, in particular sub-notes (iv) and (v) to Note (2), results into increasing of the data volume if character data are compressed.

It is recommended to change the current text of 94.6.3 **Note (2), sub-note (iv)**
"...or for character data, specifying number of octets representing the character string."
to read
"...or for character data, specifying number of octets **needed for representing the character string in the data subsets.**"
Moreover, it is proposed change the current text of 94.6.3 **Note (2), sub-note (v)**
"Actual values, V, will then be obtained ..."
to read
"Actual values, V, **other than character values,** will then be obtained ...".

2. Indirect reference to descriptors – Reg. 94.5.6.2

Current Regulation 94.5.6.2 reads:
"A sequence descriptor shall be equivalent to the corresponding list of descriptors in Table D."
This statement is fully valid when data are being expanded. Data producers and authors of data templates, however, have to pay attention to the fact that if a sequence descriptor is located under a replication descriptor 1 X Y, the X has to be modified when the sequence descriptor is replaced by the corresponding list of descriptors from Table D.

It is proposed to add a **Note under Regulation 94.5.6.2**:

If a sequence descriptor is included within the scope of a replication descriptor 1 X Y, the number of descriptors to be repeated shall be modified if the sequence descriptor is replaced by the corresponding list of descriptors from Table D.

3. Definition of operator 2 02 Y

The current definition of 2 02 Y reads:
"Add Y-128 to scale in Table B for elements which are not code or flag tables."
CCITT IA5 elements, however, should always have their scale = 0. Therefore, 2 02 Y should not apply to CCITT IA5 data.

It is proposed to modify the definition of 2 02 Y to read:
"**Add (Y-128) to the scale given for each data element in Table B, other than CCITT IA5 (character) data, code or flag tables.**"

4. Note (7) under the BUFR Table C

The Note (7) referring to 2 04 YYY reads:
"The data description operator 2 04 YYY shall be followed immediately by the descriptor 0 31 021 to indicate the meaning of the associated field".
According to this Note, 2 04 000 should be also followed by the descriptor 0 31 021. According to Note (9), however, inclusion of the descriptor 0 31 021, defined or redefined within the scope of a 2 04 YYY, is pointless outside the scope of this 2 04 YYY.

It is proposed to modify Note (7) to read:
"The data description operator 2 04 YYY**, other then 2 04 000,** shall be followed immediately by the descriptor 0 31 021 to indicate the meaning of the associated field".

5. Code figure 6 in the code table 0 31 021

The code figure 6 in 0 31 021 is defined as "Quality control flag according to GTSPP". The entries of the detailed description of the associated field (0 = unqualified to 9 = missing) are values, not bit numbers.

It is proposed to rename code figure 6 to read:
"**4-bit indicator of quality control class** according to GTSPP".

6. Note (5) under BUFR Table C

The Note (5)(a) specifies that each new definition adds to the currently defined associated field. It does not specify, however, the order of the included associated information. The order might either correspond with the order of the associated field significance or it might be reversed to it, i.e. the first included associated information would be related to the most recently defined associated field. The later approach would be in compliance with the procedure of cancellation in Note (5)(b), according to which cancellation 2 04 000 applies to the most recently defined addition to the associated field. The former alternative is reflected in the proposal below.
It is proposed to supplement Note (5)(a) with the following text:
"The order of the included associated information shall correspond with the order in which the associated fields have been defined."

7. Addition of a Note under Class 20

CLOUD COVER (TOTAL) 0 20 010 IS DEFINED IN BUFR/CREX TABLE B WITH UNIT = %. THE CORRESPONDING CODE TABLE 2700 FOR N (TOTAL CLOUD COVER) IN [1] ALLOWS TO MAKE A DIFFERENCE BETWEEN N = 9 "SKY OBSCURED BY FOG AND/OR OTHER METEOROLOGICAL PHENOMENA" AND N = / (CLOUD COVER IS INDISCERNIBLE FOR REASONS OTHER THAN FOG OR OTHER METEOROLOGICAL PHENOMENA, OR OBSERVATION IS NOT MADE). IN THE REGULATIONS FOR REPORTING TAC DATA IN TDCF, CLOUD COVER (TOTAL) 0 20 010 IS RECOMMENDED TO BE SET TO A MISSING VALUE IN BOTH CASES, WHICH HAS BEEN FOUND NOT SATISFACTORY.

It is proposed to add a Note under Class 20:
A cloud cover (total) value 113 shall indicate "Sky obscured by fog and/or other meteorological phenomena".

8. Modification of the text of entry 62 in 0 08 002

In Regulation B/C 1.4.4.2 (e) for reporting SYNOP data in TDCF (and elsewhere), Vertical significance 0 08 002 is recommended to be set to "63 (Missing value)" if sky clear is observed. This might be confusing as the actual meaning is "not applicable".

It is proposed to modify the text of the code figure 62 in 0 08 002 to read:

62Value not applicable.

9. Addition of another Note under Class 20

Bearing of ice edge 0 20 038 is defined in BUFR/CREX Table B with UNIT = Degree true. The Regulations for reporting SHIP data in TDCF require usage 0 20 038 set to 0, corresponding to the code figure 0 = "Ship in shore or flaw lead" in the Code table 0739 for D_i (True bearing of principal ice edge).

It is proposed to add a Note under Class 20:

A bearing of ice edge value 0 shall indicate "Ship in shore or flaw lead".

10. Changes entries in Code Table 0 08 052:

3 Maximum temperature less than 273.15 K
4 Maximum temperature equal to or more than 298.15 K
5 Maximum temperature equal to or more than 303.15 K
6 Maximum temperature equal to or more than 308.15 K
7 Maximum temperature equal to or more than 313.15 K
8 Minimum temperature less than 273.15 K
9 Maximum temperature equal to or more than 273.15 K

PROPOSAL FOR REGIONAL PRACTICES

New descriptors and a Note under the Class 13

F X Y	Element name	BUFR	CREX

0 11 054	Mean wind direction for 1500 m – 3000 m	Degree true	0	0	9	Degree true	0	3
0 11 055	Mean wind speed for 1500 m – 3000 m	m s^{-1}	1	0	12	m s^{-1}	1	4
0 13 047	Modified Showalter stability index	K	0	-60	6	ºC	0	2

It is proposed to add a Note under Class 13:

The "Modified Showalter stability index" is defined as the temperature difference between the ambient 500 hPa temperature and the temperature a parcel of air, initially at a selected base level, would have if brought from its condensation level to the 500 hPa surface by a moist adiabatic process. Positive values denote stable conditions, while negative values denote unstable conditions. The base level is 850 hPa, 800hPa or 750 hPa if the station elevation is less than 1000, 1000 to 1400 or 1401 to 2000 gpm above mean sea level, respectively.

ADD CREX SEQUENCES FOR CODING OF SQUALL LINES IN WEST AFRICA IN CREX

	DEFINITION OF SQUALL LINE (BY 3 POINTS)
D16060	D01011 DATE OF OBSERVATION
	D01012 HOUR OF OBSERVATION
	POSITION OF SQUALL LINE CENTRE:
	B05002 LATITUDE
	B06002 LONGITUDE
	B19005 DIRECTION OF MOVING FEATURE
	B19006 SPEED OF MOVING FEATURE
	AMPLITUDE OF FEATURE, FROM MOST EXTERNAL POINT TO CENTRE POINT:
	NORTH SIDE:
	B05002 LATITUDE:
	B06002 LONGITUDE:
	SOUTH SIDE:
	B05002 LATITUDE
	B06002 LONGITUDE
	EVOLUTION OF FEATURE:
	B04074 PERIOD OF VALIDITY
	B20028 EXPECTED CHANGE IN INTENSITY
	B11041 MAXIMUM BURST EXPECTED
	B13055 INTENSITY OF RAIN EXPECTED
	DEFINITION OF SQUALL LINE (BY MORE THAN 3 POINTS)
D16061	D01011 DATE OF OBSERVATION
	D01012 HOUR OF OBSERVATION
	POSITION OF SQUALL LINE CENTRE:
	B05002 LATITUDE
	B06002 LONGITUDE

B19005 DIRECTION OF MOVING FEATURE
B19006 SPEED OF MOVING FEATURE
AMPLITUDE OF FEATURE, FROM MOST EXTERNAL POINT TO CENTRE POINT:
NORTH SIDE:
R02000 DEFINE DELAYED REPLICATION OF NEXT 2 DESCRIPTORS:
B05002 LATITUDE
B06002 LONGITUDE
SOUTH SIDE:
R02000 DEFINE DELAYED REPLICATION OF NEXT 2 DESCRIPTORS:
B05002 LATITUDE
B06002 LONGITUDE
EVOLUTION OF FEATURE:
B04074 PERIOD OF VALIDITY
B20028 EXPECTED CHANGE IN INTENSITY
B11041 MAXIMUM BURST EXPECTED
B13055 INTENSITY OF RAIN EXPECTED

FOR EXCHANGE IN BUFR OF TEMPERATURE AND SALINITY PROFILE DATA OBSERVED BY PROFILING FLOATS:

Three ADMT members of the Argo Data Management Team (ADMT): the Japan Meteorological Agency (JMA), Canadian Marine Environmental Data Service (MEDS) and the US Naval Oceanographic Office, successfully completed the validation test of the following sequence for exchange in BUFR of temperature and salinity profile data observed by profiling floats.

Common sequence, Category 15 — Oceanographic report sequences

(Temperature and salinity profile observed by profile floats)

3 15 003 001087 - WMO Marine observing platform extended identifier
001085 - Observing platform manufacturers model
001086 - Observing platform manufacturers serial number
002036 - Buoy type
002148 - Data collection and/or location system
002149 - Type of data buoy
022055 - Float cycle number
022056 - Direction of profile
022067 - Instrument type for water temperature profile measurement
301011 - Date
301012 - Time
301021 - Latitude and longitude (high accuracy)
008080 - Qualifier for quality class
033050 - GTSPP quality class
109000 - Delayed replication of 9 descriptors
031002 - Extended delayed descriptor replication factor
007065 - Water pressure
008080 - Qualifier for quality class

033050 - GTSPP quality class
022045 - Subsurface sea temperature
008080 - Qualifier for quality class
033050 - GTSPP quality class
022064 - Salinity
008080 - Qualifier for quality class
033050 - GTSPP quality class

ADDITIONS TO COMMON CODE TABLES (OPERATIONAL)

Common Code Table C 1 and Common Code Table C 11

63 IRI (International Research Institute for Climate and Society)

Common Code Table C 2

Modify:
58 AVK-BAR (Russian Federation)
68 AVK-MRZ-UAP (Russian Federation)
69 AVK-BAR-UAP (Russian Federation)
88 MARL-A-MRZ (Russian Federation)
89 MARL-A-BAR (Russian Federation)

To use alternative words for their definition:
58 AVK - MRZ* (Russian Federation)
68 AVK - RZM-2 (Russian Federation)
69 MARL-A or Vektor-M - RZM-2 (Russian Federation)
88 MARL-A or Vektor-M - MRZ (Russian Federation)
89 MARL-A or Vektor-M - MRZ* (Russian Federation)

Note: MRZ* is the new brand-name for BAR radiosonde.

Common Code Table C 3: Instrument type for water temperature profile measurement with fall rate equation coefficients
081 Sippican AXBT(300 m probes) coefficients: 1.52, 0.0

859 Profiling Float, NEMO, no conductivity
860 Profiling Float, NEMO, SBE conductivity sensor
861 Profiling Float, NEMO, FSI conductivity sensor

Change meaning of 900 for: LMP-5 XBT (previously named T-12)

Entries for animal instruments as listed below:
995Mammal animals
996Other animals

Common Code Table C 4: Water temperature profile recorder types

08Sippican MK-10

64 Iridium communications, sampling on up transit
65 Iridium communications, sampling on down transit

Common Code Table C-5: Satellite identifier

172	MTSAT-2
257	GOES 13
258	GOES 14
259	GOES 15
283	CORIOLIS
785	AURA

In Common Table C-12:

Add the following 2 new sub-centres to existing Common Code Table C-12 for originating center number 254 (EUMETSAT):

140Lannion, France
150Svalbard, Norway

Add the following 2 new sub-centres to existing Common Code Table C-12 for originating center number 7 (U.S/NCEP):

15 North American Regional Reanalysis Project
16 Space Environment Center

Rename the following entry in Common Code Table C-12, in order to reflect the changed name of the underlying sub-center:

6 Ocean Prediction Center

Common Code Table C-13: Data sub-categories of categories defined by entries in BUFR Table A

Add in: 007Synoptic features
01 Squall Line

建议 5 (CBS-Ext.(06))

《电码手册》修正案，第 I.1 卷

基本系统委员会，

注意到：

(1) 资料表示和电码专家组的会议报告（2005 年 12 月 5-8 日，阿曼，马斯喀特），

(2) 资料表示和电码专家组和表驱动电码格式过渡协调组联席会议的报告（2006 年 5 月 8-12 日，蒙

特利尔 ICAO），

(3) ICT ISS 报告（2006 年 9 月 18-22 日，日内瓦），

考虑到需要：

(1) 对航空电码进行修正，因为 ICAO 已作了相应改动，即附录 3 的第 74 号修正案 – 国际航空导航气象服务/WMO 技术规则[C.3.1]，

建议通过下列修正案，以便从 2008 年 11 月 5 日起投入使用：

(1) 对 FM 15-XIII METAR、FM 16-XIII SPECI 和 FM 51-XIII TAF 的修正，见本建议案的附录；

要求秘书长安排将这些修正案纳入《电码手册》 第 I.1 卷。

建议 5（CBS-Ext. (06)）的附录

AMENDMENTS TO FM 15–XIII METAR, FM 16-XIII SPECI AND FM 51-XIII TAF

FM 15–XIII Ext. METAR Aerodrome routine meteorological report (with or without trend forecast)

FM 16-XIII Ext. SPECI Aerodrome special meteorological report (with or without trend forecast)

CODE FORM:

{ **METAR** or **SPECI** } **COR** CCCC YYGGgg**Z** **NIL** **AUTO** dddff**G**$f_m f_m$ { **KMH** or **KT** or **MPS** } $d_n d_n d_n$**V**$d_x d_x d_x$

{ VVVV or VVVV**NDV** or **CAVOK** } $V_N V_N V_N V_N D_v$ { **R**$D_R D_R$/$V_R V_R V_R V_R$i or **R**$D_R D_R$/$V_R V_R V_R V_R$**V**$V_R V_R V_R V_R$i } w'w' { $N_s N_s N_s h_s h_s h_s$ or **VV**$h_s h_s h_s$ or **NSC** or **NCD** }

T'T /T'$_d$T $_d$ **Q**$P_H P_H P_H P_H$ **RE**w'w' { **WS R**$D_R D_R$ or **WS ALL RWY** } (**W**$T_S T_S$/**SS'**) (**R**$D_R D_R E_R C_R e_R e_R B_R B_R$)

{ (TTTTT or **NOSIG**) } TTGGgg dddff**G**$f_m f_m$ { **KMH** or **KT** or **MPS** } { VVVV or **CAV OK** } { w'w' or **NSW** } { $N_S N_S N_S h_S h_S h_S$ or **VV**$h_S h_S h_S$ or

NSC

(RMK ……)

Changes to FM 15 and FM 16 Regulations:

Delete second sentence of Note of 15.6:

15.6 **Groups** VVVV VVVV**NDV** $V_NV_NV_NV_ND_v$

N O T E: The coding of visibility is based on the use of the metre and kilometre, in accordance with the units specified in ICAO Annex 5. ~~However, some Members in Region IV use statute miles and fractions thereof in accordance with national coding procedures as indicated in Volume II of this Manual.~~

In 15.6.2, insert after "50% of the prevailing visibility": and less than 5 000 metres

15.6.2 Directional variation in visibility $V_NV_NV_NV_ND_v$

When the horizontal visibility is not the same in different directions and when the minimum visibility is different from the prevailing visibility, and less than 1 500 metres, or less than 50% of the prevailing visibility and less than 5 000 metres, the group $V_NV_NV_NV_ND_v$ shall also be used to report the minimum visibility and its general direction in relation to the aerodrome indicated by reference to one of the eight points of the compass. If the minimum visibility is observed in more than one direction, the D_v shall represent the most operationally significant direction.

Delete last sentence in Note of 15.7.

15.7 **Groups** or

$RD_RD_R/V_RV_RV_RV_Ri$

$RD_RD_R/V_RV_RV_RV_R\mathbf{V}V_RV_RV_RV_Ri$

N O T E: The coding of runway visual range is based on the use of the metre in accordance with the unit specified in ICAO Annex 5. ~~However, some Members in Region IV use feet in accordance with national coding procedures as indicated in Volume II of this Manual.~~

Delete third sentence of 15.7.3 to read:

15.7.3 **Runway designator** D_RD_R/

The designator of each runway for which runway visual range is reported shall be indicated by D_RD_R. Parallel runways should be distinguished by appending to D_RD_R letters L, C or R indicating the left, central or right parallel runway, respectively. ~~A suitable combination of these letters is used for up to, and including, five parallel runways (i.e. LL, L, C, R, RR).~~ The letter(s) shall be appended to D_RD_R as necessary in accordance with the standard practice for

runway designation, as laid down by ICAO in Annex 14 – Aerodromes, Volume I – Aerodrome design and operations, paragraphs 5.2.2.4 and 5.2.2.5.

Add a sentence to ~~18~~15.8.6

…

15.8.6 If more than one significant weather phenomenon is observed, separate w'w' groups shall be included in the report in accordance with Code table 4678. However, if more than one form of precipitation is observed, the appropriate letter abbreviations shall be combined in a single group with the dominant type of precipitation being reported first. In such a single group, the intensity shall refer to the total precipitation and be reported with one or no indicator as appropriate.

When an automatic observing system is used and when the type of the precipitation cannot be identified by this system, the abbreviation UP shall be used for precipitation. The abbreviation UP may be combined, as necessary, with the following characteristics of present weather: FZ, SH and TS.

…

Change Note (1) of 15.8.10 as:

15.8.10 The qualifier VC shall be used to indicate the following significant weather phenomena observed in the vicinity of the aerodrome: TS, DS, SS, FG, FC, SH, PO, BLDU, BLSA, BLSN and VA. Regulations referring to the combination of VC and FG are given in Regulation 15.8.17.

NOTES:

(1) Such weather phenomena should be reported with the qualifier VC only when observed ~~within eight kilometres of the aerodrome perimeter but not at the aerodrome~~ between approximately 8 km and 16 km from the aerodrome reference point.

(2) See Regulation 15.8.7.

*Delete **SKC** in 15.9:*

15.9 **Group** $N_SN_SN_sh_sh_sh_s$ or **VV**$h_sh_sh_s$ or **NSC** or **NCD**
~~or SKC~~

Change 15.9.1.1 as:

15.9.1 *Cloud amount and cloud height* $N_SN_SN_sh_sh_sh_s$

15.9.1.1 Cloud amount, cloud type and height of cloud base shall be reported to describe the clouds of operational significance, i.e. clouds with the height of base below 1500 meters (5000 ft) or below the highest

minimum sector altitude, whichever is greater, or Cumulonimbus or towering Cumulus at any height. The cloud amount $N_SN_SN_s$ shall be reported as few (1 to 2 oktas), scattered (3 to 4 oktas), broken (5 to 7 oktas) or overcast (8 oktas), using the three-letter abbreviations FEW, SCT, BKN and OVC followed, without a space, by the height of the base of the cloud layer (mass) hshshs. ~~If there are no clouds and no restriction on vertical visibility and the abbreviation CAVOK is not appropriate, the abbreviation SKC shall be used. If SKC is reported but visibility is restricted by FG, SS, DS, BR, FU, HZ, DU, IC and SA, vertical visibility shall not be reported.~~ If there are no clouds below 1 500 m (5 000 ft) or below the highest minimum sector altitude, whichever is greater, no Cumulonimbus and no towering cumulus and no restriction on vertical visibility and the abbreviation CAVOK ~~and SKC are~~is not appropriate, then the abbreviation NSC shall be used. When an automatic observing system is used and no clouds are detected by that system, the abbreviation NCD shall be used.

…

MODIFY 15.9.1.5 AS:

"THE HEIGHT OF CLOUD BASE SHALL BE REPORTED IN STEPS OF 30 M (100 FT) UP TO 3 000 M (10 000 FT). ANY OBSERVED VALUE WHICH DOES NOT FIT THE REPORTING SCALE IN USE SHALL BE ROUNDED DOWN TO THE NEAREST LOWER STEP IN THE SCALE."

Change 15.9.1.6 as:

15.9.1.6 ~~At mountain stations, when the cloud base is below station level, the cloud group shall read NSNsNs///.~~When cumulonimbus clouds or towering cumulus clouds are detected by the automatic observing system and the cloud amount and the height of cloud base cannot be observed, the cloud amount and the height of cloud base should be replaced by "//////"

Add after "Cumulonimbus" in (b) of 15.10:

…

15.10 **Code word CAVOK**

The code word **CAVOK** shall be included in place of the groups under Regulations 15.6, 15.8 and 15.9, when the following conditions occur simultaneously at the time of observation:

(a) Visibility: 10 km or more;
(b) No cloud below 1 500 metres (5 000 ft) or below the highest minimum sector altitude, whichever is greater, and no Cumulonimbus and no towering cumulus;
(c) No significant weather phenomena (see Code table 4678).

N O T E: Highest minimum sector altitude is defined in ICAO PANS-OPS, Part 1 - Definitions, as the lowest altitude which may be used under emergency conditions which will provide a minimum clearance of 300 metres (1 000 ft) above all objects located in an area contained within a sector of a circle of 46 km (25 nautical miles) radius centred on a radio aid to navigation.

…

Keep only the first sentence of Note (2) of 15.12.2:

15.12.2 If the value of QNH is less than 1000 hPa, it shall be preceded by 0; for example, QNH 995.6 shall be reported as Q0995.

NOTES:

(1) When the first digit following the letter indicator Q is either 0 or 1, the QNH value is reported in the unit hectopascal (hPa).

(2) The unit prescribed by ICAO Annex 5 for pressure is the hectopascal. ~~However, if, by national decision and in accordance with requirements established by the authorities concerned, inches of mercury are used as the unit for QNH, the group shall be preceded by the letter A (instead of Q), followed by the value in inches, tenths and hundredths of inch, but without the decimal point. For example, QNH 29.1 in. shall by given as A2991, QNH 30.27 in. shall be given as A3027. When the QNH value is reported in the unit of inches of mercury, the first digit following the letter indicator A is either 2 or 3.~~

Change 15.13 as:

15.13 **Supplementary information – groups**

WS R~~WY~~D_RD_R

REw'w' or (**W**T_ST_S/**S**S') (**R**$D_RD_RE_RC_Re_Re_RB_RB_R$)

WS ALL RWY

Add a sentence to 15.13.2.1:

15.13.2.1 Up to three groups of information on recent weather shall be given by the indicator letters RE followed, without a space, by the appropriate abbreviations, in accordance with Regulation 15.8 (but no intensity of the recent weather phenomena shall be indicated) if the following weather phenomena were observed during the period since the last routine report, or last hour, whichever is shorter, but not at the time of observation:

- Freezing precipitation;
- Moderate or heavy drizzle, rain or snow;
- Moderate or heavy: ice pellets, hail, small hail and/or snow pellets;
- Blowing snow;
- Sandstorm or duststorm;
- Thunderstorm;
- Funnel cloud(s) (tornado or water-spout);
- Volcanic ash.

When an automatic observing system is used and when the type of the precipitation cannot be identified by this system, the abbreviation REUP shall be used for recent precipitation. It may be combined with the characteristics of the present weather in accordance with Regulation 15.8.6.

~~…~~

Change 15.13.3 as:

WS R~~WY~~D_RD_R

15.13.3 **Wind shear in the lower layers** or

WS ALL RWY

Replace in the paragraph **WS RWY**D_RD_R *by* **WS R**~~WY~~D_RD_R.

Change 15.3.6 and 15.13.6.1 and add a Note:

…

15.13.6 State of the runway (~~RRRR~~**R**$D_RD_RE_RC_Re_Re_RB_RB_R$)

15.13.6.1 Subject to regional air navigation agreement, information on the state of the runway provided by the appropriate airport authority shall be included. ~~The runway designator RRRR shall be reported in accordance with the relevant ICAO regional Air Navigation Plan.~~The runway deposits E_R, the extent of runway contamination C_R, the depth of deposit e_Re_R and the friction coefficient/braking action BRBR shall be indicated in accordance with code tables 0919, 0519, 1079 and 0366, respectively. The state of the runway group shall be replaced by the abbreviation SNOCLO when the aerodrome is closed due to extreme deposit of snow. If contaminations on a single runway or on all runways at an aerodrome have ceased to exist, this should be reported by replacing the last six digits of the group by "CLRD//".

Note.- Concerning runway designator D_RD_R, Regulation 15.7.3 applies. Additional code figures 88 and 99 are reported in accordance with the European Air Navigation Plan, FASID, Part III-AOP, Attachment A.

Change 15.14.12 as:

…

15.14.12 Inclusion of significant forecast weather w'w', using the appropriate abbreviations in accordance with Regulation 15.8, shall be restricted to indicate:

(1) the onset, cessation or change in intensity of the following weather phenomena:
- Freezing precipitation;
- Moderate or heavy precipitation (including showers);
- Duststorm;
- Sandstorm;
- Thunderstorm (with precipitation)

(2) the onset or cessation of the following weather phenomena:
- Freezing fog;
- Ice crystals;
- Low drifting dust, sand or snow;
- Blowing dust, sand or snow;
- Thunderstorm without precipitation;
- Squall;
- Funnel cloud (tornado or waterspout).

Modify 15.14.14 as

15.14.14 ~~To indicate a change to clear sky, the abbreviation SKC (sky clear) shall replace the groups~~ ~~N_1NSNshshsh, or VVhshshs.~~When no cloud below 1 500 metres (5 000 ft) or the highest minimum sector altitude, whichever is greater, and no Cumulonimbus and no towering cumulus are forecast, and **CAVOK** ~~or SKB are~~is not appropriate, the abbreviation NSC shall be used.

FM 51-XIII Ext. TAFAerodrome forecast

CODE FORM:

{ **TAF AMD** or / **TAF COR** or / **TAF** } CCCC YYGGgg**Z** { **NIL** or $Y_1Y_1G_1G_1/Y_2Y_2G_2G_2$ { dddff**G**f_mf_m or **CNL** } { KMH **or** KT or **MPS** } }

{ VVVV w'w' { $N_SN_SN_Sh_Sh_Sh_S$ or VV**$h_Sh_Sh_S$** } or **NSC** } or

CAVOK

(**TX**$T_FT_F/Y_FY_FG_FG_F$**Z** **TN**$T_FT_F/Y_FY_FG_FG_F$**Z**)

{ { **PROB** C_2C_2 or **PROB** C_2C_2 TTTTT or TTTTT } YYGG/$Y_eY_eG_eG_e$ or TTYYGGgg } dddff**G**f_mf_m { **KMH** or **KT** or **MPS** } { VVVV { w'w' or **NSW** } { $N_SN_SN_Sh_Sh_Sh_S$ or **VV**$h_Sh_Sh_S$ or **NSC** } or **CAVOK** }

CHANGES to REGULATIONS:

51.1.4 The forecast shall cover the period $Y_1Y_1G_1G_1$ to $Y_2Y_2G_2G_2$. The forecast period may be divided into two or more self-contained parts by the use of the time indicator group TTYYGGgg in the form of FMYYGGgg. A complete description of the forecast prevailing conditions shall be given at the beginning of the forecast or the self-contained parts designated by FMYYGGgg. If any element is expected to change significantly during the forecast period or a self-contained part thereof, one or more sets of change groups TTTTT YYGG/$Y_eY_eG_eG_e$ shall be added after the complete description of the conditions prevailing before the change. Each change group shall be followed by the modified elements subject to Regulation 51.1.5.

NOTES:

(1) The governing criteria for inclusion of change groups are specified in publication WMO-No. 49 – Technical Regulations [C.3.1].

(2) See Regulation **51.8.1.**

51.1.5 The group w'w' and/or the group $N_SN_SN_Sh_Sh_Sh_S$, or **VV**$h_Sh_Sh_S$ shall be omitted if the corresponding element(s) is (are) expected to be absent or not significant. After change groups

TTTTT YYGG/$Y_eY_eG_eG_e$, elements shall be omitted if they are not expected to differ significantly from the preceding values they possessed in the coded forecast (see Regulations 51.5.2, 51.6.1.7 and 51.6.3). However, in case of significant change of the clouds, all cloud groups, including any significant layer(s) or masses not expected to change, shall be given

…

Delete second sentence of note in 51.4:

51.4 **Group VVVV**

NOTE: The coding of visibility is based on the use of the metre and kilometre, in accordance with the units specified in ICAO Annex 5. .~~ However, in Region VI, statute miles and fractions thereof are used in accordance with national coding procedures as indicated in Volume II of this Manual.~~

…

Change 51.5.1 to read:

51.5.1 Inclusion of significant forecast weather w'w', using the appropriate abbreviations in accordance with Regulation 15.8, shall be restricted to indicate:

(1) the occurrence, cessation or change in intensity of the following weather phenomena:
- Freezing precipitation;
- Moderate or heavy precipitation (including showers);
- Duststorm;
- Sandstorm;
- Thunderstorm (with precipitation);

(2) the occurrence or cessation of the following weather phenomena:
- Ice crystals;
- Freezing fog;
- Low drifting dust, sand or snow;
- Blowing dust, sand or snow;
- Thunderstorm without precipitation;
- Squall;
- Funnel cloud (tornado or waterspout).

…

Change 51.6 as:

$N_SN_SN_Sh_Sh_Sh_S$

or

51.6 **Group VV**$h_Sh_Sh_S$

~~or~~
~~SKC(~~**or NSC**~~)~~

Delete 51.6.1.7:

~~51.6.1.7 When clear sky is forecast, the cloud group shall be replaced by the abbreviation SKC.~~

Modify 51.8 to 51.10.1 as follows:

51.8 **Groups** TTTTT YYGG/ $Y_eY_eG_eG_e$ or TTYYGGgg

51.8.1 These groups shall be used when, during the period $Y_1Y_1G_1G_1$ to $Y_2Y_2G_2G_2$, a change in some or all of the elements forecast is expected to occur at some intermediate time YYGGgg or during the period YYGG to $Y_eY_eG_eG_e$. Such groups shall not be introduced until all the data groups necessary to describe the elements forecast in the period $Y_1Y_1G_1G_1$ to Y_2Y_2 G_2G_2 or YYGGgg have been given.

NOTES:
(1) If the end of the forecast period is midnight, Y_eY_e should be the date before midnight and G_eG_e should be indicated as 24.
(2) See Note (1) to Regulation 51.1.4.

51.8.2 The time indicator group TTYYGGgg in the form of FMYYGGgg (from YYGGgg) shall be used to indicate the beginning of a self-contained part of the forecast indicated by YYGGgg. When the group FMYYGGgg is used, all forecast conditions given before the group FMYYGGgg are superseded by the conditions indicated after the group.

51.8.3 The change groups TTTTT YYGG/ $Y_eY_eG_eG_e$ in the form of BECMG YYGG/ $Y_eY_eG_eG_e$ shall indicate a change to forecast meteorological conditions expected to occur at either a regular or irregular rate at an unspecified time within the period YYGG to $Y_eY_eG_eG_e$. The duration of the period YYGG to $Y_eY_eG_eG_e$ shall normally not exceed two hours and in any case shall not exceed four hours. The change groups shall be followed by a description of all the elements for which a change is forecast. When an element is not described in data groups which follow the change groups, the description of this element for the period between $Y_1Y_1G_1G_1$ and Y_2Y_2 G_2G_2 shall be considered to remain valid subject to Regulation 51.1.5.

N O T E : The conditions described after the groups BECMG YYGG/ $Y_eY_eG_eG_e$ are those expected to prevail from $Y_eY_eG_eG_e$ until $Y_2Y_2G_2G_2$, unless a further change is expected, in which case a further set of change groups BECMG YYGG/ $Y_eY_eG_eG_e$ or FMYYGGgg must be used.

51.8.4 The change groups TTTTT YYGG/ $Y_eY_eG_eG_e$ in the form of TEMPO YYGG/ $Y_eY_eG_eG_e$ shall indicate frequent or infrequent temporary fluctuations to forecast meteorological conditions which are expected to last less than one hour in each instance and, in the aggregate cover, less than half of the period indicated by YYGG/ $Y_eY_eG_eG_e$.

NOTES:
(1) If the modified forecast condition is expected to last one hour or more, Regulation 51.8.2 or 51.8.3 applies, i.e. the change groups BECMG YYGG/ $Y_eY_eG_eG_e$ or FMYYGGgg must be used at the

beginning and end of the period during which conditions are expected to depart from those forecast prior to YYGG or YYGGgg.

(2) To keep forecasts clear and unambiguous, the use of change indicators should be carefully considered and kept to a minimum. In particular, the overlapping of change periods should be avoided. At any time during the period of validity of the TAF, only one possible variation to the prevailing forecast conditions should normally be indicated. The subdivision of the forecast period by FMYYGGgg should be used to avoid too complex forecasts in cases where many significant changes to weather conditions are expected to occur throughout the forecast period.

51.9 **Groups PROB**C_2C_2 YYGG/ $Y_eY_eG_eG_e$

51.9.1 In order to indicate the probability of occurrence of alternative value(s) of forecast element(s), during a defined period of time, the **PROB**C_2C_2 YYGG/ $Y_eY_eG_eG_e$ shall be placed directly before the alternative value(s). For C_2C_2, only the values 30 and 40 shall be used to indicate the probabilities 30 and 40%, respectively.

N O T E: A probability of less than 30% of actual values deviating from those forecast is not considered to justify the use of the group PROB. When the possibility of an alternative value is 50% or more, this should be indicated by the use of BECMG, TEMPO or FM as appropriate.

51.9.2 A probability statement may also be related to the occurrence of temporary fluctuations. In this case, the group **PROB**C_2C_2 shall be placed immediately before the change group TEMPO and the group YYGG/ $Y_eY_eG_eG_e$ shall be placed after TEMPO (for example PROB30 TEMPO 2922/3001).

51.9.3 The group **PROB**C_2C_2 shall not be used in combination with the change indicator group BECMG or the time indicator group FMYYGGgg.

51.10 **Groups (TX**T_FT_F/$Y_FY_FG_FG_F$**Z TN**T_FT_F/$Y_FY_FG_FG_F$**Z)**

51.10.1 To indicate forecast maximum and minimum temperatures expected to occur at the time indicated by $Y_FY_FG_FG_F$**Z**, the letter indicator **TX** for the maximum forecast temperature and **TN** for the minimum forecast temperature shall precede T_FT_F without a space.

CHANGES TO SPECIFICATION OF SYMBOLIC LETTERS:

1. ENTRY FOR YY

DELETE FM 51 FROM SUBPARAGRAPH (B)

ADD SUBPARAGRAPHS:

(D) ON WHICH THE FORECAST WAS ISSUED (FM 51)

(E) INDICATING THE DATE (DAY) ON WHICH PART OF THE FORECAST COMMENCES OR A FORECAST CHANGE COMMENCES (FM 51)

2. ENTRY FOR Y_FY_F

ADD PARAGRAPH
VALID DAY OF THE MONTH (UTC) OF THE TEMPERATURE FORECAST (FM 51)

3. ENTRY FOR Y_eY_e

ADD PARAGRAPH:
DAY OF MONTH (UTC) OF END OF FORECAST CHANGE

4. ENTRY FOR Y_2Y_2

ADD FM51 TO THE LIST OF CODE FORMS.

5. CHANGE D_RD_R TO:

"RUNWAY DESIGNATOR REPORTED IN ACCORDANCE WITH ICAO ANNEX 14." (FM 15, FM 16)

6. DELETE R_RR_R.

CHANGE IN NOTES TO CODE TABLE 4678

(10) THE DESCRIPTOR SH SHALL BE USED ONLY IN COMBINATION WITH ONE OR MORE OF THE LETTER ABBREVIATIONS RA, SN, ~~PL,~~ GS, GR AND UP TO …..

(11) THE DESCRIPTOR TS, IF NOT USED ON ITS OWN, SHALL BE USED ONLY IN COMBINATION WITH ONE OR MORE OF THE LETTER ABBREVIATIONS RA, SN, GS, GR AND UP TO INDICATE THUNDERSTORM …….

(12) THE DESCRIPTOR FZ SHALL BE USED ONLY IN COMBINATION WITH THE LETTER ABBREVIATIONS FG, DZ, RA AND UP FOR EXAMPLE FZRA.

建议 6（CBS-Ext.(06)）

《电码手册》修正案，第 I.2 卷，C 部分，二进制码和字母数字码的共同特征

基本系统委员会，

注意到：

(1) 基本系统委员会第十三次届会含决议案和建议案的最终节略报告 (WMO-No. 985) 总摘要，第 5.2.73 段，

(2) 表驱动电码格式协调组的会议报告（2005 年 11 月 1-4 日，日内瓦），

(3) 资料表示和电码专家组的会议报告（2005 年 12 月 5-8 日，阿曼马斯喀特），

(4) 资料表示和电码专家组和表驱动电码格式过渡协调组联席会议的报告（2006 年 5 月 8-12 日，蒙特利尔 ICAO），

(5) ICT ISS 报告（2006 年 9 月 18-22 日，日内瓦），

考虑到需要调整和升级当前的报告规范：从传统字母数字码转为 TDCF，并且需要将区域/国家规范纳入 BUFR 模板，

建议通过下列修正案，以便从 2007 年 11 月 7 日起投入业务使用：

(1) 在电码手册第 I.2 卷 C 部分 – 二进制码和字母数字码的共同特征中增加如下内容："d. 以表驱动电码格式报告传统观测资料的规定：BUFR 或 CREX"，见本建议案的附录；

要求秘书长安排将这些修正案纳入*电码手册*，但是只放在 WMO 网站上。

Annex to Recommendation 6 (CBX-Ext.(06))

（English only）

PART C – COMMON FEATURES TO BINARY AND ALPHANUMERIC CODES
d. Regulations for reporting traditional observations data in Table Driven Code Forms (TDCF): BUFR or CREX

B/C1 – Regulations for reporting SYNOP data in TDCF

ANNEX: Regional regulations for reporting SYNOP data in BUFR/CREX for RA I – RA II – RA III – RA IV – RA VI

B/C5 – Regulations for reporting SYNOP MOBIL data in TDCF

B/C10 – Regulations for reporting SHIP data in TDCF

B/C20 – Regulations for reporting PILOT, PILOT SHIP and PILOT MOBIL data in TDCF

B/C25 – Regulations for reporting TEMP, TEMP SHIP and TEMP MOBIL data in TDCF

ANNEX I:RA IV BUFR template for TEMP, TEMP SHIP and TEMP MOBIL data

ANNEX II:List of parameters for representation of additional information on sounding instrumentation

B/C26 – Regulations for reporting TEMP DROP data in TDCF

B/C30 – Regulations for reporting CLIMAT data in TDCF

B/C32 – Regulations for reporting CLIMAT SHIP data in TDCF

B/C35 – Regulations for reporting CLIMAT TEMP and CLIMAT TEMP SHIP data in TDCF

Regulations for reporting traditional observations data in TDCF

B/C1 – Regulations for reporting SYNOP data in TDCF
B/C5 – Regulations for reporting SYNOP MOBIL data in TDCF
B/C10 – Regulations for reporting SHIP data in TDCF
B/C20 – Regulations for reporting PILOT, PILOT SHIP and PILOT MOBIL data in TDCF
B/C25 – Regulations for reporting TEMP, TEMP SHIP and TEMP MOBIL data in TDCF
B/C26 – Regulations for reporting TEMP DROP data in TDCF
B/C30 – Regulations for reporting CLIMAT data in TDCF
B/C32 – Regulations for reporting CLIMAT SHIP data in TDCF
B/C35 – Regulations for reporting CLIMAT TEMP and CLIMAT TEMP SHIP data in TDCF

General

(i) The regulations for reporting data of traditional observations in BUFR or CREX are intended to provide a link between the *Manual on Codes*, Volume I.1 and Volume II, containing traditional alphanumeric codes (TAC) regulations with detailed description of reporting practices and the Volume I.2, where the code forms FM 94 BUFR and FM 95 CREX are defined.

(ii) A BUFR/CREX template has been developed for each traditional observation that is considered suitable for migration to table driven code forms (TDCF). Templates presented prior the regulations are BUFR templates; if used for CREX, relevant modifications have to be introduced.

(iii) The regulations for reporting data of each traditional observation in TDCF are numbered in the increasing order in compliance with a standard BUFR/CREX template recommended for the data type. For reference, the number of the corresponding TAC regulation is included at the end of the regulation, written in square brackets.

(iv) BUFR/CREX templates defined for traditional observation data contain not only the elements reported in the corresponding TAC, but also other important information. The regulations for reporting traditional observations data in BUFR/CREX address also these additional entries (e.g. horizontal and vertical coordinates of the observation site, position of sensors, significance qualifiers).

(v) With each element introduced within the regulations, the unit and the required precision are specified. If different units are used in BUFR and CREX, the unit in which the element value is reported in CREX is also mentioned. Scaling is expected to be executed by the encoding BUFR or CREX

software; in case of manual encoding of a CREX message, however, the scaling shall be included in the reporting procedure.

(vi) If the unit of the element is defined as a flag table, the element values shall be reported in octal representation in CREX.

(vii) Reporting practices primarily refer to the procedures relevant for producing of the data in BUFR or CREX at the observing site. When data are collected in TAC and converted into BUFR or CREX in the centre, the differences in the reporting procedures, if any, are mentioned.

(viii) If regional or national reporting practices require inclusion of additional parameters, the regulations provide guidance for addition of the relevant descriptors.

(ix) A NIL report shall be represented by setting all values to "missing value" except for the identification of the station or observing site and delayed replication factors.

Note: Texts in italic within the regulations indicate that special attention should be given to this aspect of the regulation.

References:

[1] *Manual on Codes*, WMO-No. 306, Volume I.1 and I.2

[2] *Manual on Codes*, WMO-No. 306, Volume II

[3] Final Report, ET DR&C, Kuala Lumpur, 21 – 26 June 2004

[4] Final Report, ET DR&C, Muscat, 5 – 8 December 2005

[5] Guide to Climatological Practices, WMO-No. 100

[6] Technical Regulations, WMO-No. 49

[7] Handbook on CLIMAT and CLIMAT TEMP reporting, WMO/TD No.1188

B/C1 – Regulations for reporting SYNOP data in TDCF

TM 307080 - BUFR template for synoptic reports from fixed land stations suitable for SYNOP data

3 07 080		**Sequence for representation of synoptic reports from a fixed land station suitable for SYNOP data**
	3 01 090	Fixed surface station identification, time, horizontal and vertical coordinates
	3 02 031	Pressure data
	3 02 035	Basic synoptic "instantaneous" data
	3 02 036	Clouds with bases below station level
	3 02 047	Direction of cloud drift
	0 08 002	Vertical significance
	3 02 048	Direction and elevation of cloud
	3 02 037	State of ground, snow depth, ground minimum temperature
	3 02 043	Basic synoptic "period" data
	3 02 044	Evaporation data
	1 01 002	Replicate next descriptor 2 times
	3 02 045	Radiation data (from 1 hour and/or 24 hour period)
	3 02 046	Temperature change

This BUFR template for synoptic reports from fixed land stations further expands as follows:

3 01 090			**Fixed surface station identification, time, horizontal and vertical coordinates**	Unit, scale
	3 01 004	0 01 001	WMO block number **II**	Numeric, 0
		0 01 002	WMO station number **iii**	Numeric, 0
		0 01 015	Station or site name	CCITT IA5, 0
		0 02 001	Type of station ($\mathbf{i_x}$)	Code table, 0
	3 01 011	0 04 001	Year	Year, 0
		0 04 002	Month	Month, 0
		0 04 003	Day **YY**	Day, 0
	3 01 012	0 04 004	Hour **GG**	Hour, 0
		0 04 005	Minute **gg**	Minute, 0
	3 01 021	0 05 001	Latitude (high accuracy)	Degree, 5
		0 06 001	Longitude (high accuracy)	Degree, 5
	0 07 030		Height of station ground above mean sea level	m, 1
	0 07 031		Height of barometer above mean sea level	m, 1
3 02 031			**Pressure data**	
	3 02 001	0 10 004	Pressure $\mathbf{P_0P_0P_0P_0}$	Pa, –1
		0 10 051	Pressure reduced to mean sea level **PPPP**	Pa, –1
		0 10 061	3-hour pressure change **ppp**	Pa, –1
		0 10 063	Characteristic of pressure tendency **a**	Code table, 0
	0 10 062		24-hour pressure change $\mathbf{p_{24}p_{24}p_{24}}$	Pa, –1
	0 07 004		Pressure (standard level) $\mathbf{a_3}$	Pa, –1
	0 10 009		Geopotential height of the standard level **hhh**	gpm, 0
3 02 035			**Basic synoptic "instantaneous" data**	
			Temperature and humidity data	
	3 02 032	0 07 032	Height of sensor above local ground (for temperature and humidity measurement)	m, 2
		0 12 101	Temperature/dry-bulb temperature(sc.2) $\mathbf{s_nTTT}$	K, 2
		0 12 103	Dew-point temperature (scale 2) $\mathbf{s_nT_dT_dT_d}$	K, 2
		0 13 003	Relative humidity	%, 0
			Visibility data	
	3 02 033	0 07 032	Height of sensor above local ground (for visibility measurement)	m, 2
		0 20 001	Horizontal visibility **VV**	m, –1
			Precipitation past 24 hours	
	3 02 034	0 07 032	Height of sensor above local ground (for precipitation measurement)	m, 2
		0 13 023	Total precipitation past 24 hours $\mathbf{R_{24}R_{24}R_{24}R_{24}}$	kg m^{-2}, 1
	0 07 032		Height of sensor above local ground (set to missing to cancel the previous value)	m, 2
			Cloud data	
	3 02 004	0 20 010	Cloud cover (total) **N**	%, 0
		0 08 002	Vertical significance	Code table, 0
		0 20 011	Cloud amount (of low or middle clouds) $\mathbf{N_h}$	Code table, 0
		0 20 013	Height of base of cloud **h**	m, –1
		0 20 012	Cloud type (low clouds C_L) $\mathbf{C_L}$	Code table, 0
		0 20 012	Cloud type (middle clouds C_M) $\mathbf{C_M}$	Code table, 0
		0 20 012	Cloud type (high clouds C_H) $\mathbf{C_H}$	Code table, 0
			Individual cloud layers or masses	
	1 01 000		Delayed replication of 1 descriptor	

	0 31 001		Delayed descriptor replication factor	Numeric, 0
	3 02 005	0 08 002	Vertical significance	Code table, 0
		0 20 011	Cloud amount (N_s) **N_s**	Code table, 0
		0 20 012	Cloud type (C) **C**	Code table, 0
		0 20 013	Height of base of cloud (h_sh_s) **h_sh_s**	m, -1
			Clouds with bases below station level	
3 02 036	1 05 000		Delayed replication of 5 descriptors	
	0 31 001		Delayed descriptor replication factor	Numeric, 0
	0 08 002		Vertical significance	Code table, 0
	0 20 011		Cloud amount **N'**	Code table, 0
	0 20 012		Cloud type **C'**	Code table, 0
	0 20 014		Height of top of cloud **H'H'**	m, -1
	0 20 017		Cloud top description **C_t**	Code table, 0
			Direction of cloud drift gr. **$56D_LD_MD_H$**	
3 02 047	1 02 003		Replicate 2 descriptors 3 times	
	0 08 002		Vertical significance = 7 (low cloud) = 8 (middle cloud) = 9 (high cloud)	Code table, 0
	0 20 054		True direction from which clouds are moving **D_L, D_M, D_H**	Degree true, 0
0 08 002			Vertical significance (set to missing to cancel the previous value)	Code table, 0
			Direction and elevation of cloud gr. **$57CD_ae_C$**	
3 02 048	0 05 021		Bearing or azimuth **D_a**	Degree true, 2
	0 07 021		Elevation angle **e_C**	Degree, 2
	0 20 012		Cloud type **C**	Code table, 0
	0 05 021		Bearing or azimuth (set to missing to cancel the previous value)	Degree true, 2
	0 07 021		Elevation angle (set to missing to cancel the previous value)	Degree, 2
			State of ground, snow depth, ground minimum temperature	
3 02 037	0 20 062		State of ground (with or without snow) **E** or **E'**	Code table, 0
	0 13 013		Total snow depth **sss**	m, 2
	0 12 113		Ground minimum temperature (scale2), past 12 hours **$s_nT_gT_g$**	K, 2
3 02 043			**Basic synoptic "period" data**	
			Present and past weather	
	3 02 038	0 20 003	Present weather **ww**	Code table, 0
		0 04 024	Time period in hours	Hour, 0
		0 20 004	Past weather (1) **W_1**	Code table, 0
		0 20 005	Past weather (2) **W_2**	Code table, 0
			Sunshine data (from 1 hour and 24 hour period)	
	1 01 002		Replicate 1 descriptors 2 times	
	3 02 039	0 04 024	Time period in hours	Hour, 0
		0 14 031	Total sunshine **SS** and **SSS**	Minute, 0
			Precipitation measurement	
	3 02 040	0 07 032	Height of sensor above local ground (for precipitation measurement)	m, 2
		1 02 002	Replicate next 2 descriptors 2 times	
		0 04 024	Time period in hours **t_R**	Hour, 0
		0 13 011	Total precipitation / total water equivalent of snow **RRR**	kg m^{-2}, 1

			Extreme temperature data	
	3 02 041	0 07 032	Height of sensor above local ground (for temperature measurement)	m, 2
		0 04 024	Time period or displacement	Hour, 0
		0 04 024	Time period or displacement (see Notes 1 and 2)	Hour, 0
		0 12 111	Maximum temperature (scale 2) at height and over period specified $\mathbf{s_nT_xT_xT_x}$	K, 2
		0 04 024	Time period or displacement	Hour, 0
		0 04 024	Time period or displacement (see Note 2)	Hour, 0
		0 12 112	Minimum temperature (scale 2) at height and over period specified $\mathbf{s_nT_nT_nT_n}$	K, 2
			Wind data	
	3 02 042	0 07 032	Height of sensor above local ground (for wind measurement)	m, 2
		0 02 002	Type of instrumentation for wind measurement $\mathbf{i_w}$	Flag table, 0
		0 08 021	Time significance (= 2 (time averaged))	Code table, 0
		0 04 025	Time period (= - 10 minutes, or number of minutes after a significant change of wind)	Minute, 0
		0 11 001	Wind direction **dd**	Degree true, 0
		0 11 002	Wind speed **ff**	m s^{-1}, 1
		0 08 021	Time significance (= missing value)	Code table, 0
		1 03 002	Replicate next 3 descriptors 2 times	
		0 04 025	Time period in minutes	Minute, 0
		0 11 043	Maximum wind gust direction	Degree true, 0
		0 11 041	Maximum wind gust speed 910$\mathbf{f_mf_m}$, 911$\mathbf{f_xf_x}$	m s^{-1}, 1
	0 07 032		Height of sensor above local ground (set to missing to cancel the previous value)	m, 2
			Evaporation data	
3 02 044	0 04 024		Time period in hours	Hour, 0
	0 02 004		Type of instrument for evaporation or crop type for evapotranspiration $\mathbf{i_E}$	Code table, 0
	0 13 033		Evaporation /evapotranspiration **EEE**	kg m^{-2}, 1
			Radiation data (from 1 hour and 24 hour period)	
1 01 002			Replicate next descriptor 2 times	
3 02 045	0 04 024		Time period in hours	Hour, 0
	0 14 002		Long-wave radiation, integrated over period specified 553SS 4**FFFF** or 553SS 5**FFFF,** 55SSS 4$\mathbf{F_{24}F_{24}F_{24}F_{24}}$ or 55SSS 5$\mathbf{F_{24}F_{24}F_{24}F_{24}}$	J m^{-2}, -3
	0 14 004		Short-wave radiation, integrated over period specified 553SS 6**FFFF,** 55SSS 6$\mathbf{F_{24}F_{24}F_{24}F_{24}}$	J m^{-2}, -3
	0 14 016		Net radiation, integrated over period specified 553SS 0**FFFF** or 553SS 1**FFFF,** 55SSS 0$\mathbf{F_{24}F_{24}F_{24}F_{24}}$ or 55SSS 1$\mathbf{F_{24}F_{24}F_{24}F_{24}}$	J m^{-2}, -4
	0 14 028		Global solar radiation (high accuracy), integrated over period specified 553SS 2**FFFF,** 55SSS 2$\mathbf{F_{24}F_{24}F_{24}F_{24}}$	J m^{-2}, -2
	0 14 029		Diffuse solar radiation (high accuracy), integrated over period specified 553SS 3**FFFF,** 55SSS 3$\mathbf{F_{24}F_{24}F_{24}F_{24}}$	J m^{-2}, -2
	0 14 030		Direct solar radiation (high accuracy), integrated over	J m^{-2}, -2

			period specified 55408 4**FFFF,** 55508 5$\mathbf{F_{24}F_{24}F_{24}F_{24}}$	
			Temperature change group **54**$\mathbf{g_0s_nd_T}$	
3 02 046	0 04 024		Time period or displacement	Hour, 0
	0 04 024		Time period or displacement (see Note 3)	Hour, 0
	0 12 049		Temperature change over period specified $\mathbf{s_nd_T}$	K, 0

Notes:

1) Within RA-IV, the maximum temperature at 1200 UTC is reported for the previous calendar day (i.e. the ending time of the period is not equal to the nominal time of the report). To construct the required time range, descriptor 004024 has to be included two times. If the period ends at the nominal time of the report, value of the second 004024 shall be set to 0.

2) Within RA-III, the maximum day-time temperature and the minimum night-time temperature is reported (i.e. the ending time of the period may not be equal to the nominal time of the report). To construct the required time range, descriptor 004024 has to be included two times. If the period ends at the nominal time of the report, value of the second 004024 shall be set to 0.

3) To construct the required time range, descriptor 004024 has to be included two times.

Regulations:

B/C 1.1 Section 1 of BUFR or CREX

B/C 1.2 Fixed station identification, time, horizontal and vertical coordinates

B/C 1.3 Pressure data

B/C 1.4 Basic synoptic “instantaneous” data

B/C 1.4.1 Temperature and humidity data

B/C 1.4.2 Visibility data

B/C 1.4.3 Precipitation past 24 hours

B/C 1.4.4 Cloud data

B/C 1.4.5 Individual cloud layers or masses

B/C 1.5 Clouds with bases below station level

B/C 1.6 Direction of cloud drift

B/C 1.7 Direction and elevation of cloud

B/C 1.8 State of ground, snow depth, ground minimum temperature

B/C 1.9 “Instantaneous” data required by regional or national reporting practices

B/C 1.10 Basic synoptic “period” data

B/C 1.10.1 Present and past weather

B/C 1.10.2 Sunshine data

B/C 1.10.3 Precipitation measurement

B/C 1.10.4 Extreme temperature data

B/C 1.10.5 Wind data

B/C 1.11 Evaporation data

B/C 1.12 Radiation data

B/C 1.13 Temperature change

B/C 1.14 “Period” data required by regional or national reporting practices

B/C 1.1 Section 1 of BUFR or CREX

B/C 1.1.1 Entries required in Section 1 of BUFR

The following entries shall be included in BUFR Section 1:

-BUFR master table,

-identification of originating/generating centre,
-identification of originating/generating sub-centre,
-update sequence number,
-identification of inclusion of optional section,
-data category (= 000 for SYNOP data),
-international data sub-category (1), (2),
-local data subcategory,
-version number of master table,
-version number of local tables,
-year (year of the century up to BUFR edition 3),
-month (standard time),
-day (standard time = YY in the abbreviated telecommunication header for SYNOP data),
-hour (standard time = GG in the abbreviated telecommunication header for SYNOP data),
-minute (standard time = 00 for SYNOP data).

Notes:

(1) Inclusion of this entry is required starting with BUFR edition 4.

(2) If required, the international data sub-category shall be included for SYNOP data as
= 002 at main synoptic times 00, 06, 12, 18 UTC,
= 001 at intermediate synoptic times 03, 09, 15, 21 UTC,
= 000 at observation times 01, 02, 04, 05, 07, 08, 10, 11, 13, 14, 16, 17, 19, 20, 22 and 23 UTC.

B/C 1.1.2 Entries required in Section 1 of CREX

The following entries shall be included in CREX Section 1:
-CREX master table,
-CREX edition number,
-CREX table version number,
-version number of BUFR master table (1),
-version number of local tables (1),
-data category (= 000 for SYNOP data),
-international data sub-category (1), (2),
-identification of originating/generating centre (1),
-identification of originating/generating sub-centre (1),
-update sequence number (1),
-number of subsets (1),
-year (standard time) (1),
-month (standard time) (1),
-day (standard time = YY in the abbreviated telecommunication header for SYNOP data) (1),
-hour (standard time = GG in the abbreviated telecommunication header for SYNOP data) (1),
-minute (standard time = 00 for SYNOP data) (1).

Notes:

(1) Inclusion of these entries is required starting with CREX edition 2.

(2) If inclusion of international data sub-category is required, Note (2) under B/C 1.1.1 applies.

B/C 1.2 Fixed station identification, time, horizontal and vertical coordinates <3 01 090>

B/C 1.2.1 Fixed station identification

WMO block number station (0 01 001) and WMO station number (0 01 002) shall be always reported as a non-missing value.

Station or site name (0 01 015) shall be reported as published in WMO-No. 306, Volume A, Observing Stations, provided that the station name does not exceed 20 characters. A shortened version of the name shall be reported otherwise.

Type of station (0 02 001) shall be reported to indicate the type of the station operation (manned, automatic or hybrid).

Note:

(1) If a station operates as a manned station for a part of the day and as an automatic station for the rest of the day, code figure 2 (Hybrid) may be used in all reports. It is preferable, however, to use code figure 1 (Manned) in reports produced under the supervision of an observer, and a code figure 0 (Automatic) in reports produced while the station operates in the automatic mode.

B/C 1.2.2 Time of observation

Year (0 04 001), month (0 04 002), day (0 04 003), hour (0 04 004) and minute (0 04 005) of the actual time of observation shall be reported.

Note:

(1) The actual time of observation shall be the time at which the barometer is read. [12.1.6]

B/C 1.2.2.1

If the actual time of observation differs by 10 minutes or less from the standard time reported in Section 1, the standard time may be reported instead of the actual time of observation. [12.2.8]

B/C 1.2.3 Horizontal and vertical coordinates

Latitude (0 05 001) and longitude (0 06 001) of the station shall be reported in degrees with precision in 10^{-5} of a degree.

Height of station ground above mean sea level (0 07 030) and height of barometer above mean sea level (0 07 031) shall be reported in meters with precision in tenths of a meter.

B/C 1.3 Pressure data <3 02 031>

B/C 1.3.1 Pressure at the station level

Pressure at the station level (0 10 004), i.e. at the level defined by 0 07 031 (height of barometer above mean sea level), shall be reported in pascals (with precision in tens of a pascal).

B/C 1.3.1.1

The station pressure shall be included in reports for global exchange from land stations, together with either the mean sea level pressure or, in accordance with Regulation B/C 1.3.5.1, with the geopotential height of a standard pressure level. [12.2.4]

Note:

(1) Inclusion of the station pressure at other times is left to the decision of individual Members.

B/C 1.3.2 Pressure reduced to mean sea level

Pressure reduced to mean sea level (0 10 051) shall be reported in pascals (with precision in tens of a pascal).

B/C 1.3.2.1

Whenever air pressure at mean sea level can be computed with reasonable accuracy, this pressure shall be reported. [12.2.3.4.1]

Notes:

(1) For a station situated in a region of normal synoptic network density, the pressure at mean sea level is considered not to be computed with reasonable accuracy when it introduces a deformation into the analysis of the horizontal pressure field, which is purely local and recurring.

(2) For a station lying in a data-sparse area of the synoptic network, reasonable accuracy will be obtained when using a reduction method, which has proved to be satisfactory in a region of normal network density and under similar geographic conditions.

B/C 1.3.3 Three-hour pressure change and characteristic of pressure tendency

Amount of pressure change at station level, during the three hours preceding the time of observation (0 10 061), either positive, zero *or negative*, shall be reported in pascals (with precision in tens of a pascal).

B/C 1.3.3.1

Unless specified otherwise by regional decision, pressure tendency shall be included whenever the three-hourly pressure tendency is available. [12.2.3.5.1]

B/C 1.3.3.2

The characteristic of pressure tendency (Code table 0 10 063) over the past three hours shall, whenever possible, be determined on the basis of pressure samples at equi-spaced intervals not exceeding one hour. [12.2.3.5.2]

Note:

(1) Algorithms for selecting the appropriate code figure are included in publication WMO–No.8, Guide to Meteorological Instruments and Methods of Observation.

B/C 1.3.3.3

Where it is not possible to apply the algorithms specified in Regulation B/C 1.3.3.2 in reports from automatic weather stations, the characteristic of pressure tendency shall be reported as 2 when the tendency is positive, as 7 when the tendency is negative, and as 4 when the atmospheric pressure is the same as three hours before. [12.2.3.5.3]

B/C 1.3.4 24-hour pressure change

If specified by regional decision, amount of surface pressure change at station level, during 24 hours preceding the time of observation (0 10 062), either positive, zero or negative, shall be reported in pascals (with precision in tens of a pascal). [12.4.7.1.2(k), (l)]

B/C 1.3.5 Geopotential height of the standard level

Geopotential height of the standard level (0 10 009) shall be reported in geopotential meters. The

standard isobaric level is specified by the preceding entry Pressure (0 07 004).

B/C 1.3.5.1

By regional decision, a high-level station, which cannot give pressure at mean sea level to a satisfactory degree of accuracy, shall report both the station-level pressure and the geopotential height of an agreed standard isobaric surface. [12.2.3.4.2]

B/C 1.4 Basic synoptic "instantaneous" data <3 02 035>

B/C 1.4.1 Temperature and humidity data <3 02 032>

B/C 1.4.1.1 Height of sensor above local ground

Height of sensor above local ground (0 07 032) for temperature and humidity measurement shall be reported in meters (with precision in hundredths of a meter).

This datum represents the actual height of temperature and humidity sensors above ground at the point where the sensors are located.

B/C 1.4.1.2 Dry-bulb air temperature

Dry-bulb air temperature (0 12 101) shall be reported in degrees Kelvin (with precision in hundredths of a degree Kelvin); if produced in CREX, in degrees Celsius (with precision in hundredths of a degree Celsius)

Notes:

(1) Temperature data shall be reported with precision in hundredths of a degree even if they are measured with the accuracy in tenths of a degree. This requirement is based on the fact that conversion from the Kelvin to the Celsius scale has often resulted into distortion of the data values.

(2) Temperature t (in degrees Celsius) shall be converted into temperature T (in degrees Kelvin) using equation: $T = t + 273.15$.

B/C 1.4.1.2.1

When the data are not available as a result of a temporary instrument failure, this quality shall be included as a missing value. [12.2.3.2]

B/C 1.4.1.3 Dew-point temperature

Dew-point temperature (0 12 103) shall be reported in degrees Kelvin (with precision in hundredths of a degree Kelvin); if produced in CREX, in degrees Celsius (with precision in hundredths of a degree Celsius).

Note:

(1) Notes (1) and (2) under Regulation B/C 1.4.1.2 shall apply.

B/C 1.4.1.3.1

When the data are not available as a result of a temporary instrument failure, this quality shall be included as a missing value. [12.2.3.3.2]

B/C 1.4.1.4 Relative humidity

Relative humidity (0 13 003) shall be reported in units of a percent.

B/C 1.4.1.4.1

Both dew point temperature and relative humidity shall be reported when available.

B/C 1.4.2 Visibility data <3 02 033>

B/C 1.4.2.1 Height of sensor above local ground

Height of sensor above local ground (0 07 032) for visibility measurement shall be reported in meters (with precision in hundredths of a meter).

This datum represents the actual height of visibility sensors above ground at the point where the sensors are located. If visibility is estimated by a human observer, average height of observer's eyes above station ground shall be reported.

B/C 1.4.2.2 Horizontal visibility

Horizontal visibility (0 20 001) at surface shall be reported in meters (with precision in tens of a meter).

B/C 1.4.2.2.1

When the horizontal visibility is not the same in different directions, the shortest distance shall be given for visibility. [12.2.1.3.1]

B/C 1.4.3 Precipitation past 24 hours <3 02 034>

B/C 1.4.3.1 Height of sensor above local ground

Height of sensor above local ground (0 07 032) for precipitation measurement shall be reported in meters (with precision in hundredths of a meter).

This datum represents the actual height of the rain gauge rim above ground at the point where the rain gauge is located.

B/C 1.4.3.2 Total amount of precipitation during the 24-hour period

Total amount of precipitation during the 24-hour period ending at the time of observation (0 13 023) shall be reported in kilograms per square meter (with precision in tenths of a kilogram per square meter). [12.4.9]

B/C 1.4.3.2.1

The precipitation over the past 24 hours shall be included (not missing) at least once a day at one appropriate time of the main standard times (0000, 0600, 1200, 1800 UTC). [12.4.1]

B/C 1.4.3.2.2

Precipitation, when it can be and has to be reported, shall be reported as 0.0 kgm^{-2} if no precipitation were observed during the referenced period. [12.2.5.4]

B/C 1.4.3.2.3

Trace shall be reported as "- 0.1 kgm^{-2} ".

B/C 1.4.4 Cloud data <3 02 004>

B/C 1.4.4.1 Total cloud cover

Total cloud cover (0 20 010) shall embrace the total fraction of the celestial dome covered by clouds irrespective of their genus. It shall be reported in *units of a percent*.

Note:

(1) Total cloud cover shall be reported as 113 when sky is obscured by fog and/or other meteorological phenomena.

B/C 1.4.4.1.1

Total cloud cover shall be reported as actually seen by the observer during the observation. [12.2.2.2.1]

B/C 1.4.4.1.2

Altocumulus perlucidus or Stratocumulus perlucidus ("mackerel sky") shall be reported *as 99% or less* (unless overlying clouds appear to cover the whole sky) since breaks are always present in this cloud form even if it extends over the whole celestial dome. [12.2.2.2.2]

B/C 1.4.4.1.3

Total cloud cover shall be reported as zero when blue sky or stars are seen through existing fog or other analogous phenomena without any trace of cloud being seen. [12.2.2.2.3]

B/C 1.4.4.1.4

When clouds are observed through fog or analogous phenomena, their amount shall be evaluated and reported as if these phenomena were non-existent. [12.2.2.2.4]

B/C 1.4.4.1.5

Total cloud cover shall not include the amount resulting from rapidly dissipating condensation trails. [12.2.2.2.5]

B/C 1.4.4.1.6

Persistent condensation trails and cloud masses which have obviously developed from condensation trails shall be reported as cloud. [12.2.2.2.6]

B/C 1.4.4.2 Vertical significance – Code table 0 08 002

To specify vertical significance (0 08 002) within the sequence 3 02 004, a code figure shall be selected in the following way:

(a) If low clouds are observed, then code figure 7 (Low cloud) shall be used.

(b) If there are no low clouds but middle clouds are observed, then code figure 8 (Middle clouds) shall be used.

(c) If there are no low and there are no middle clouds but high clouds are observed, then code figure 0 shall be used.

(d) If sky is obscured by fog and/or other phenomena, then code figure 5 (Ceiling) shall be used.

(e) If there are no clouds (clear sky), then code figure 62 (Value not applicable) shall be used.

(f) If the cloud cover is not discernible for reasons other than (d) above or observation is not made, then code figure 63 (Missing value) shall be used.

B/C 1.4.4.3 Cloud amount (of low or middle clouds) – Code table 0 20 011

Amount of all the low clouds (clouds of the genera Stratocumulus, Stratus, Cumulus, and Cumulonimbus) present or, if no low clouds are present, the amount of all the middle clouds (clouds of the genera Altocumulus, Altostratus, and Nimbostratus) present.

B/C 1.4.4.3.1

Cloud amount shall be reported as follows:

(a) If there are low clouds, then the total amount of all low clouds, as actually seen by the observer during the observation shall be reported for the cloud amount.

(b) If there are no low clouds but there are middle clouds, then the total amount of the middle clouds shall be reported for the cloud amount.

(c) If there are no low clouds and there are no middle clouds but there are high clouds (clouds of the genera Cirrus, Cirrocumulus, and Cirrostratus), then the cloud amount shall be reported as zero. [12.2.7.2.1]

B/C 1.4.4.3.2

Amount of Altocumulus perlucidus or Stratocumulus perlucidus (“mackerel sky”) shall be reported using code figure 7 or less since breaks are always present in this cloud form even if it extends over the whole celestial dome. [12.2.7.2.2]

B/C 1.4.4.3.3

When the clouds reported for cloud amount are observed through fog or an analogous phenomenon, the cloud amount shall be reported as if these phenomena were not present. [12.2.7.2.3]

B/C 1.4.4.3.4

If the clouds reported for cloud amount include contrails, then the cloud amount shall include the amount of persistent contrails. Rapidly dissipating contrails shall not be included in the value for the cloud amount. [12.2.7.2.4]

B/C 1.4.4.4 Height of base of lowest cloud

Height above surface of the base (0 20 013) of the lowest cloud seen shall be reported in meters (with precision in tens of a meter).

Note:

(1) The term "height above surface" shall be considered as being the height above the official aerodrome elevation or above station elevation at a non-aerodrome station.

B/C 1.4.4.4.1

When the station is in fog, a sandstorm or in blowing snow but the sky is discernable, the base of the lowest cloud shall refer to the base of the lowest cloud observed, if any. When, under the above conditions, the sky is not discernible, the base of the lowest cloud shall be reported as missing. [12.2.1.2]

B/C 1.4.4.4.2

When no cloud are reported (Total cloud cover = 0) the base of the lowest cloud *shall be reported as a missing value.*

B/C 1.4.4.4.3

When, by national decision, clouds with bases below the station are reported from the station and clouds with bases below and tops above the station are observed, the base of the lowest cloud *shall be reported having a negative value if the base of cloud is discernible, or as a missing value.*

B/C 1.4.4.5 Cloud type of low, middle and high clouds - Code table 0 20 012

Clouds of the genera Stratocumulus, Stratus, Cumulus, and Cumulonimbus (low clouds) shall be reported for the first entry 0 20 012, clouds of the genera Altocumulus, Altostratus, and Nimbostratus (middle clouds) shall be reported for the second entry 0 20 012 and clouds of the genera Cirrus, Cirrocumulus, and Cirrostratus (high clouds) shall be reported for the third entry 0 20 012.

B/C 1.4.4.5.1

The reporting of type of low, middle and high clouds shall be as specified in publication WMO-NO. 407 – International Cloud Atlas, Volume I. [12.2.7.3]

B/C 1.4.5 Individual cloud layers or masses

B/C 1.4.5.1 Number of individual cloud layers or masses

The number of individual cloud layers or masses shall be indicated by Delayed descriptor replication factor 0 31 001 in BUFR and by a four-digit number in the Data Section corresponding to the position of the replication descriptor in the Data Description Section of CREX.

Note:

(1) The number of cloud layers or masses shall never be set to missing value.

(2) The number of cloud layers or masses shall be set to a positive value in a NIL report.

B/C 1.4.5.1.1

The number of individual cloud layers or masses shall in the absence of Cumulonimbus clouds not exceed three. Cumulonimbus clouds, when observed, shall always be reported, so that the total

number of individual cloud layers or masses can be four. The selection of layers (or masses) to be reported shall be made in accordance with the following criteria:

(a) The lowest individual layer (or mass) of any amount (cloud amount at least one octa or less, but not zero);
(b) The next higher individual layer (or mass) the amount of which is greater than two octas;
(c) The next higher individual layer (or mass) the amount of which is greater than four octas;
(d) Cumulonimbus clouds, whenever observed and not reported under (a), (b) and (c) above. [12.4.10.1]

B/C 1.4.5.1.2

When the sky is clear, the number of individual cloud layers or masses shall be set to zero.

B/C 1.4.5.1.3

The order of reporting the individual cloud layers or masses shall always be from lower to higher levels. [12.4.10.2]

B/C 1.4.5.2 Individual cloud layer or mass <3 02 005>

Each cloud layer or mass shall be represented by the following four parameters: Vertical significance (0 08 002), amount of individual cloud layer or mass (0 20 011), type of cloud layer or mass (0 20 012) and height of base of individual cloud layer or mass (0 20 013).

B/C 1.4.5.2.1 Vertical significance – Code table 0 08 002

To specify vertical significance (0 08 002) within the sequence 3 02 005, a code figure shall be selected in the following way:

(a) Code figure 1 shall be used in the first non-Cumulonimbus layer.
(b) Code figure 2 shall be used in the second non-Cumulonimbus layer.
(c) Code figure 3 shall be used in the third non-Cumulonimbus layer.
(d) Code figure 4 shall be used in any Cumulonimbus layer.
(e) If sky is obscured by fog and/or other phenomena, then code figure 5 (Ceiling) shall be used.
(f) If the cloud cover is not discernible for reasons other than (e) above or observation is not made, then code figure 63 (Missing value) shall be used.

B/C 1.4.5.2.2 Cloud amount, type and height of base

B/C 1.4.5.2.2.1

When the sky is clear, in accordance with Regulation B/C 1.4.5.1.2 cloud amount, genus, and height shall not be included. [12.4.10.4]

B/C 1.4.5.2.2.2

In determining cloud amounts (Code table 0 20 011) to be reported for individual layers or masses, the observer shall estimate, by taking into consideration the evolution of the sky, the cloud amounts of each individual layer or mass at the different levels, as if no other clouds existed. [12.4.10.3]

B/C 1.4.5.2.2.3

Type of a cloud layer or mass (Code table 0 20 012) shall be reported using code figures 0, 1, 2, 3, 4, 5, 6, 7, 8, 9, 59 and 63.

B/C 1.4.5.2.2.4

If, notwithstanding the existence of fog, sandstorm, duststorm, blowing snow or other obscuring phenomena, the sky is discernible, the partially obscuring phenomena shall be disregarded. If, under the above conditions, the sky is not discernible, the cloud type shall be reported using *code figure 59*

and the cloud height shall be replaced by vertical visibility. [12.4.10.5]

Note:

(1) The vertical visibility is defined as the vertical visual range into an obscuring medium.

B/C 1.4.5.2.2.5

If two or more types of cloud occur with their bases at the same level and this level is one to be reported in accordance with Regulation B/C 1.4.5.1.1, the selection for cloud type and amount shall be made with the following criteria:

(a) If these types do not include Cumulonimbus then cloud genus shall refer to the cloud type that represents the greatest amount, or if there are two or more types of cloud all having the same amount, the highest applicable code figure for cloud genus shall be reported. Cloud amount shall refer to the total amount of cloud whose bases are all at the same level;

(b) If these types do include Cumulonimbus then one layer shall be reported to describe only this type with cloud genus indicated as Cumulonimbus and the cloud amount as the amount of the Cumulonimbus. If the total amount of the remaining type(s) of cloud (excluding Cumulonimbus) whose bases are all at the same level is greater than that required by Regulation B/C 1.4.5.1.1, then another layer shall be reported with type being selected in accordance with (a) and amount referring to the total amount of the remaining cloud (excluding Cumulonimbus). [12.4.10.6]

B/C 1.4.5.2.2.6

Regulations B/C1.4.4.1.3 to B/C1.4.4.1.6, inclusive, shall apply. [12.4.10.7]

B/C 1.4.5.2.2.7

Height above surface of the cloud base (0 20 013) shall be reported in meters (with precision in tens of a meter).

Note:

(1) The term “height above surface” shall be considered as being the height above the official aerodrome elevation or above station elevation at a non-aerodrome station.

B/C 1.5 Clouds with bases below station level <3 02 036>

B/C 1.5.1 Number of cloud layers with bases below station level

The number of cloud layers with bases below station level shall be indicated by Delayed descriptor replication factor 0 31 001 in BUFR and by a four-digit number in the Data Section corresponding to the position of the replication descriptor in the Data Description Section of CREX.

Notes:

(1) The number of cloud layers with bases below station level shall never be set to a missing value.

(2) The number of cloud layers with bases below station level shall be set to a positive value in a NIL report.

B/C 1.5.1.1

Inclusion of these data shall be determined by national decision. The number of cloud layers with bases below station level shall be always set to zero in reports from a station at which observations of clouds with bases below station level are not executed.

B/C 1.5.1.2

When no cloud layers with bases below station are observed, the number of cloud layers with bases below station level shall be set to zero.

B/C 1.5.1.3

If the station is in continuous or almost continuous cloud, the number of cloud layers with bases below

station level shall be set to one, with all parameters reported as missing except for vertical significance 0 08 002 that shall be set to 10 (cloud layer with a base below and tops above station level). [12.5.4]

B/C 1.5.1.4

If clouds with bases below station level are not discernible due to fog and/or other phenomena or observation is not made, then the number of cloud layers with bases below station level shall be set to one, with all parameters reported as missing except for vertical significance 0 08 002 that shall be set to 11.

B/C 1.5.1.5

When two or more cloud layers with their bases below station level occur at different levels, two or more cloud layers shall be reported. [12.5.5]

B/C 1.5.1.6

Clouds with bases below and tops above station level shall be reported as the first layer within the sequence 3 02 036, provided that the station is out of cloud sufficiently frequently to enable the various features to be recognized. Other low clouds present with tops below station level shall be reported as the following layers (one or more) within the sequence 3 02 036. [12.5.3]

Notes:

(1) Clouds with bases below and tops above station level shall be reported also in sequences 3 02 004 and 3 02 005. [12.5.3]

(2) Clouds with tops below station level shall be reported only in sequence 3 02 036, and any co-existent clouds with bases above station level shall be reported only in sequences 3 02 004 and 3 02 005. [12.5.2]

B/C 1.5.2 Individual cloud layer with base below station level

Each cloud layer with base below station level shall be represented by the following five parameters: Vertical significance (0 08 002), amount of clouds with base below station level (0 20 011), type of clouds with base below station level (0 20 012), altitude of the upper surface of clouds (0 20 014) and cloud top description (0 20 017).

B/C 1.5.2.1 Vertical significance - Code table 0 08 002

Code figure 10 shall be used for cloud layers with bases below and tops above station level; code figure 11 shall be used for cloud layers with bases and tops below station level.

B/C 1.5.2.2 Amount of clouds with base below station level - Code table 0 20 011

B/C 1.5.2.2.1

Regulations B/C1.4.4.1.1 to B/C1.4.4.1.6, inclusive, shall apply. [12.5.8]

B/C 1.5.2.2.2

Spaces occupied by mountains emerging from the cloud layers shall be counted as occupied by clouds. [12.5.9]

B/C 1.5.2.3 Type of clouds with base below station level - Code table 0 20 012

Type of clouds with bases below station level shall be reported using code figures 0, 1, 2, 3, 4, 5, 6, 7, 8, 9 and 63.

B/C 1.5.2.4 Height of top of clouds above mean sea level

Height of top of clouds (0 20 014) shall be used to report the height above mean sea level of the upper surface of clouds, and shall be expressed in meters (with precision in tens of a meter).

B/C 1.5.2.4.1

Height of top of clouds with bases below and tops above station level shall be reported, provided that the upper surface of clouds can be observed. [12.5.3 (b)]

B/C 1.5.2.5 Cloud top description - Code table 0 20 017

B/C 1.5.2.5.1

Description of top of clouds with bases below and tops above station level shall be reported, provided that the station is out of cloud sufficiently frequently to enable the features to be recognized.

B/C 1.5.2.5.2

Rapidly dissipating condensation trails shall not be reported. However, the top of persistent condensation trails and cloud masses which have obviously developed from condensation trails (and whose bases are below station level) shall be reported in Sequence 3 02 036. [12.5.6], [12.5.7]

B/C 1.6 Direction of cloud drift <3 02 047>

This information is required from land stations mainly in the tropics. [12.4.7.5]

B/C 1.6.1 Vertical significance – Code table 0 08 002

To specify vertical significance (0 08 002) within the sequence 3 02 047, code figures shall be selected in the following way:

(a) Code figure 7 (Low cloud) shall be used in the first replication.

(b) Code figure 8 (Middle clouds) shall be used in the second replication.

(c) Code figure 9 (High cloud) shall be used in the third replication.

B/C 1.6.2 True direction from which clouds are moving

True direction from which low, middle, or high clouds are moving (0 20 054) shall be reported in degrees true as follows:

(a) True direction from which the low clouds are moving shall be included in the first replication.

(b) True direction from which the middle clouds are moving shall be included in the second replication.

(c) True direction from which the high clouds are moving shall be included in the third replication.

B/C 1.7 Direction and elevation of cloud <3 02 048>

This information is required from land stations mainly in the tropics. [12.4.7.5]

B/C 1.7.1 Direction of cloud

True direction (0 05 021), from which orographic clouds or clouds with vertical development are seen, shall be *reported in degrees true*. The cloud genus shall be specified by the third entry of the sequence 3 02 048, i.e. by Cloud type – Code table 0 20 012.

Note:

(1) It is considered sufficient to report direction of cloud in degrees true, although 0 05 021 (Bearing or azimuth) is defined with higher accuracy (hundredths of a degree true).

B/C 1.7.2 Elevation of cloud

Elevation angle (0 07 021) of the top of the cloud shall be reported in degrees. The cloud genus shall be specified by the following entry, i.e. by Cloud type – Code table 0 20 012.

Note:

(1) It is considered sufficient to report elevation of the top of cloud in degrees, although 0 07 021 (Elevation angle) is defined with higher accuracy (hundredths of a degree).

B/C 1.8 State of ground, snow depth, ground minimum temperature <3 02 037>

B/C 1.8.1 State of ground (with or without snow) - Code table 0 20 062.

State of ground without snow or with snow shall be reported using Code table 0 20 062. The synoptic hour at which this datum is reported shall be determined by regional decision.

B/C 1.8.2 Total snow depth

Total snow depth (0 13 013) shall be reported in meters (with precision in hundredths of a meter). The synoptic hour at which this datum is reported shall be determined by regional decision.

B/C 1.8.2.1

When total snow depth has to be reported, it is reported as 0.00 m if no snow, ice and other forms of solid precipitation on the ground are observed at the time of observation. A snow depth value of "– 0.01 m" shall indicate a little (less than 0.005 m) snow. A snow depth value of "– 0.02 m" shall indicate "snow cover not continuous".

B/C 1.8.2.2

The measurement shall include snow, ice and all other forms of solid precipitation on the ground at the time of observation. [12.4.6.1]

B/C 1.8.2.3

When the depth is not uniform, the average depth over a representative area shall be reported. [12.4.6.2]

B/C 1.8.3 Ground minimum temperature, past 12 hours

Ground minimum temperature from the previous 12 hours (0 12 113) shall be reported in degrees Kelvin (with precision in hundredths of a degree Kelvin); if produced in CREX, in degrees Celsius (with precision in hundredths of a degree Celsius).

Notes:

(1) Ground minimum temperature shall be reported with precision in hundredths of a degree even if they are measured with the accuracy in tenths of a degree. This requirement is based on the fact that conversion from the Kelvin to the Celsius scale has often resulted into distortion of the data values.

(2) Ground minimum temperature t (in degrees Celsius) shall be converted into ground minimum temperature T (in degrees Kelvin) using equation: $T = t + 273.15$.

(3) The period of time covered by ground minimum temperature and the synoptic hour at which this temperature is reported shall be determined by regional decision. If ground minimum temperature is to be reported from the period of previous night, then "ground minimum temperature, past 12 hours" (0 12 113) shall be reported as a missing value. In this case, ground minimum temperature of the previous night (0 12 122) shall be reported as shown in Common sequences 3 07 081, 3 07 082 and 3 07 083 suitable for SYNOP data in compliance with reporting practices in RA I, RA II and RA III, respectively.

B/C 1.9 "Instantaneous" data required by regional or national reporting practices

If regional or national reporting practices require inclusion of additional "instantaneous" parameters, the sequence descriptor 3 07 080 shall not be used. In this case BUFR/CREX template for SYNOP data shall be used in its first level expanded form and the descriptors, corresponding to the required

"instantaneous" parameters, shall be inserted to precede 3 02 043 (Basic synoptic "period" data).

Note:

(1) "Instantaneous" parameter is a parameter that is not coupled to a time period descriptor, e.g. 0 04 024, 0 04 025.

B/C 1.9.1 "Instantaneous" data required by reporting practices in RA I

Regulations for reporting additional "instantaneous" parameters, required by regional reporting practices in RA I, are shown in the Annex.

B/C 1.9.2 "Instantaneous" data required by reporting practices in RA II

Regulations for reporting additional "instantaneous" parameters, required by regional reporting practices in RA II, are shown in the Annex.

B/C 1.9.3 "Instantaneous" data required by reporting practices in RA III

Regulations for reporting additional "instantaneous" parameters, required by regional reporting practices in RA III, are shown in the Annex.

B/C 1.9.4 "Instantaneous" data required by reporting practices in RA IV

Regulations for reporting additional "instantaneous" parameters, required by regional reporting practices in RA IV, are shown in the Annex.

B/C 1.9.5 "Instantaneous" data required by reporting practices in RA V

No regional requirements are indicated for reporting SYNOP data in RA V.

B/C 1.9.6 "Instantaneous" data required by reporting practices in RA VI

Regulations for reporting additional "instantaneous" parameters, required by regional reporting practices in RA VI, are shown in the Annex.

B/C 1.10 Basic synoptic "period" data <3 02 043>

B/C 1.10.1 Present and past weather <3 02 038>

B/C 1.10.1.1

Present weather (Code table 0 20 003) and past weather (1) (Code table 0 20 004) and past weather (2) (Code table 0 20 005) shall be reported as non-missing values if present and past conditions are known. In case of a report from a manually operated station after a period of closure or at start up, when past weather conditions for the period applicable to the report are unknown, past weather (1) and past weather (2) reported as missing shall indicate that previous conditions are unknown. This regulation shall also apply to automatic reporting stations with the facility to report present and past weather. [12.2.6.1]

B/C 1.10.1.2

Code figures 0, 1, 2, 3, 100, 101, 102 and 103 for present weather and code figures 0, 1, 2 and 10 for past weather (1) and past weather (2) shall be considered to represent phenomena without significance.

[12.2.6.2]

B/C 1.10.1.3

Present and past weather shall be *reported if observation was made (data available), regardless significance of the phenomena.*

Note:

(1) If data are produced and collected in traditional codes and present weather and past weather is omitted in a SYNOP report (no significant phenomena observed), code figure 508 shall be used for present weather and code figure 10 for past weather (1) and past weather (2) when converted into BUFR or CREX.

B/C 1.10.1.4

If no observation was made (data not available), code figure 509 shall be used for present weather and both past weather (1) and past weather (2) shall be reported as missing.

B/C 1.10.1.5 Present weather from a manned weather station

B/C 1.10.1.5.1

If more than one form of weather is observed, the highest applicable code figure from the range <00 to 99> shall be selected for present weather. Code figure 17 shall have precedence over code figures 20 – 49. Other weather may be reported using additional entries 0 20 003 or 0 20 021 to 0 20 026 applying Regulation B/C 1.9. [12.2.6.4.1]

B/C 1.10.1.5.2

In coding 01, 02, or 03, there is no limitation on the magnitude of the change of the cloud amount. Code figures 00, 01, and 02 can each be used when the sky is clear at the time of observation. In this case, the following interpretation of the specifications shall apply:

- 00 is used when the preceding conditions are not known,
- 01 is used when the clouds have dissolved during the past hour,
- 02 is used when the sky has been continuously clear during the past hour. [12.2.6.4.2]

B/C 1.10.1.5.3

When the phenomenon is not predominantly water droplets, the appropriate code figure shall be selected without regard to visibility. [12.2.6.4.3]

B/C 1.10.1.5.4

The code figure 05 shall be used when the obstruction to vision consists predominantly of lithometeors. [12.2.6.4.4]

B/C 1.10.1.5.5

National instructions shall be used to indicate the specifications for code figures 07 and 09. [12.2.6.4.5]

B/C 1.10.1.5.6

The visibility restrictions on code figure 10 shall be 1000 meters or more. The specification refers only to water droplets and ice crystals. [12.2.6.4.6]

B/C 1.10.1.5.7

For code figures 11 or 12 to be reported, the apparent visibility shall be less than 1000 meters. [12.2.6.4.7]

B/C 1.10.1.5.8

For code figure 18, the following criteria for reporting squalls shall be used:

(a) When wind speed is measured: A sudden increase of wind speed of at least eight meters per second, the speed rising to 11 meters per second or more and lasting for at least one minute;

(b) When the Beaufort scale is used for estimating wind speed: A sudden increase of wind speed by at least three stages of the Beaufort scale, the speed rising to force 6 or more and lasting for at least one minute. [12.2.6.4.8]

B/C 1.10.1.5.9

Code figures 20 – 29 shall never be used when precipitation is observed at the time of observation. [12.2.6.4.9]

B/C 1.10.1.5.10

For code figure 28, visibility shall have been less than 1000 meters.

Note:

(1) The specification refers only to visibility restrictions which occurred as a result of water droplets or ice crystals. [12.2.6.4.10]

B/C 1.10.1.5.11

For synoptic coding purposes, a thunderstorm shall be regarded as being at the station from the time thunder is first heard, whether or not lightning is seen or precipitation is occurring at the station. A thunderstorm shall be reported if thunder is heard within the normal observational period preceding the time of the report. A thunderstorm shall be regarded as having ceased at the time thunder is first heard and the cessation is confirmed if thunder is not heard for 10 – 15 minutes after this time. [12.2.6.4.11]

B/C 1.10.1.5.12

The necessary uniformity in reporting code figures 36, 37, 38, and 39, which may be desirable within certain regions, shall be obtained by means of national instructions. [12.2.6.4.12]

B/C 1.10.1.5.13

A visibility restriction “less than 1000 meters” shall be applied to code figures 42 – 49. In the case of code figures 40 or 41, the apparent visibility in the fog or ice fog patch or bank shall be less than 1000 meters. Code figures 40 – 47 shall be used when the obstructions to vision consist predominantly of water droplets or ice crystals, and 48 or 49 when the obstructions consist predominantly of water droplets. [12.2.6.4.13]

B/C 1.10.1.5.14

When referring to precipitation, the phrase “at the station” in the code table shall mean “at the point where the observation is normally taken”. [12.2.6.4.14]

B/C 1.10.1.5.15

The precipitation shall be encoded as intermittent if it has been discontinuous during the preceding hour, without presenting the character of a shower. [12.2.6.4.15]

B/C 1.10.1.5.16

The intensity of precipitation shall be determined by the intensity at the time of the observation. [12.2.6.4.16]

B/C 1.10.1.5.17

Code figures 80 – 89 shall be used only when the precipitation is of the shower type and takes place at the time of the observation.

Note:

(1) Showers are produced by convective clouds. They are characterized by their abrupt beginning and end and by the generally rapid and sometimes great variations in the intensity of the precipitation. Drops and solid particles falling in a shower are generally larger than those falling in non-showery precipitation. Between showers openings may be observed unless stratiform clouds fill the intervals between the cumuliform clouds. [12.2.6.4.17]

B/C 1.10.1.5.18

In reporting code figure 98, the observer shall be allowed considerable latitude in determining whether precipitation is or is not occurring, if it is not actually visible. [12.2.6.4.18]

B/C 1.10.1.6 Present weather from an automatic weather station

B/C 1.10.1.6.1

The highest applicable code figure shall be selected. [12.2.6.5.1]

B/C 1.10.1.6.2

In coding code figures 101, 102, and 103, there is no limitation on the magnitude of the change of the cloud amount. Code figures 100, 101, and 102 can each be used when the sky is clear at the time of observation. In this case, the following interpretation of the specifications shall apply:

- Code figure 100 is used when the preceding conditions are not known;
- Code figure 101 is used when the clouds have dissolved during the past hour;
- Code figure 102 is used when the sky has been continuously clear during the past hour. [12.2.6.5.2]

B/C 1.10.1.6.3

When the phenomenon is not predominantly water droplets, the appropriate code figure shall be selected without regard to the visibility. [12.2.6.5.3]

B/C 1.10.1.6.4

The code figures 104 and 105 shall be used when the obstruction to vision consists predominantly of lithometeors. [12.2.6.5.4]

B/C 1.10.1.6.5

The visibility restriction on code figure 110 shall be 1000 meters or more. The specification refers only to water droplets and ice crystals. [12.2.6.5.5]

B/C 1.10.1.6.6

For code figure 118, the following criteria for reporting squalls shall be used:

A sudden increase of wind speed of at least eight meters per second, the speed rising to 11 meters per second or more and lasting for at least one minute. [12.2.6.5.6]

B/C 1.10.1.6.7

Code figures 120 – 126 shall never be used when precipitation is observed at the time of observation. [12.2.6.5.7]

B/C 1.10.1.6.8

For code figure 120, visibility shall have been less than 1000 meters.

Note: The specification refers only to visibility restrictions which occurred as a result of water droplets or ice crystals. [12.2.6.5.8]

B/C 1.10.1.6.9

For synoptic coding purposes, a thunderstorm shall be regarded as being at the station from the time thunder is first detected, whether or not lightning is detected or precipitation is occurring at the station. A thunderstorm shall be reported in present weather if thunder is detected within the normal observational period preceding the time of the report. A thunderstorm shall be regarded as having ceased at the time thunder is last detected and the cessation is confirmed if thunder is not detected for 10 – 15 minutes after this time. [12.2.6.5.9]

B/C 1.10.1.6.10

A visibility restriction “less than 1000 meters” shall be applied to code figures 130 – 135. [12.2.6.5.10]

B/C 1.10.1.6.11

The precipitation shall be encoded as intermittent if it has been discontinuous during the preceding hour, without presenting the character of a shower. [12.2.6.5.11]

B/C 1.10.1.6.12

The intensity of precipitation shall be determined by the intensity at the time of observation. [12.2.6.5.12]

B/C 1.10.1.6.13

Code figures 180 – 189 shall be used only when the precipitation is intermittent or of the shower type and takes place at the time of observation.

Note:

(1) Showers are produced by convective clouds. They are characterized by their abrupt beginning and end and by the generally rapid and sometimes great variations in the intensity of the precipitation. Drops and solid particles falling in a shower are generally larger than those falling in non-showery precipitation. Between showers openings may be observed unless stratiform clouds fill the intervals between the cumuliform clouds. [12.2.6.5.13]

B/C 1.10.1.7 Past weather reported from a manned weather station

B/C 1.10.1.7.1 Time period

The time period (0 04 024) covered by past weather (1) and past weather (2) shall be expressed as *a negative value* in hours:

(a) Six hours, for observations at 0000, 0600, 1200, and 1800 UTC;
(b) Three hours for observations at 0300, 0900, 1500, and 2100 UTC;
(c) Two hours for intermediate observations if taken every two hours.
(d) *One hour* for intermediate observations if taken every hour. [12.2.6.6.1]

B/C 1.10.1.7.2

The code figures for past weather (1) and past weather (2) shall be selected in such a way that past and present weather together give as complete a description as possible of the weather in the time interval concerned. For example, if the type of weather undergoes a complete change during the time interval concerned, the code figures selected for past weather (1) and past weather (2) shall describe the weather prevailing before the type of weather indicated by present weather began. [12.2.6.6.2]

B/C 1.10.1.7.3

When the past weather (1) and past weather (2) are used in hourly reports, Regulation B/C 1.10.1.7.1 (d) shall apply. [12.2.6.6.3]

B/C 1.10.1.7.4

If, using Regulation B/C 1.10.1.7.2, more than one code figure may be given to past weather (1), the highest figure shall be reported for past weather (1) and the second highest code figure shall be reported for past weather (2). [12.2.6.6.4]

B/C 1.10.1.7.5

If the weather during the period has not changed so that only one code figure may be selected for past weather, then that code figure shall be reported for both past weather (1) and past weather (2). [12.2.6.6.5]

B/C 1.10.1.8 Past weather reported from an automatic weather station

B/C 1.10.1.8.1 Time period

The time period (0 04 024) covered by past weather (1) and past weather (2) shall be expressed as *a negative value* in hours:

(a) Six hours for observations at 0000, 0600, 1200, and 1800 UTC;
(b) Three hours for observations at 0300, 0900, 1500, and 2100 UTC;
(c) Two hours for intermediate observations if taken every two hours.
(d) *One hour* for intermediate observations if taken every hour. [12.2.6.7.1]

B/C 1.10.1.8.2

The code figures for past weather (1) and past weather (2) shall be selected so that the maximum capability of the automatic station to discern past weather is utilized, and so that past and present weather together give as complete a description as possible of the weather in the time interval concerned. [12.2.6.7.2]

B/C 1.10.1.8.3

In cases where the automatic station is capable only of discerning very basic weather conditions, the lower code figures representing basic and generic phenomena may be used. If the automatic station has higher discrimination capabilities, the higher code figures representing more detailed explanation of the phenomena shall be used. For each basic type of phenomenon, the highest code figure within the discrimination capability of the automatic station shall be reported. [12.2.6.7.3]

B/C 1.10.1.8.4

If the type of weather during the time interval concerned undergoes complete and discernible changes, the code figures selected for past weather (1) and past weather (2) shall describe the weather prevailing before the type of weather indicated by present weather began. The highest figure shall be reported for past weather (1) and the second highest code figure shall be reported for past weather (2). [12.2.6.7.4]

B/C 1.10.1.8.5

If a discernible change in weather has not occurred during the period, so that only one code figure may be selected for the past weather, then that code figure shall be reported for both past weather (1) and past weather (2). For example, rain during the entire period shall be reported as code figure 14 for both past weather (1) and past weather (2) in the case of an automatic station incapable of differentiating types of precipitation, or code figure 16 for both past weather (1) and past weather (2) in the case of a station with the higher discrimination capability. [12.2.6.7.5]

B/C 1.10.2 Sunshine data <1 01 002><3 02 039>

B/C 1.10.2.1 Period of reference for sunshine duration

Time period in hours (0 04 024) shall be included as follows:

(a) one hour in the first replication (reported as -1);
(b) 24 hours in the second replication (reported as -24).

B/C 1.10.2.2 Duration of sunshine

Duration of sunshine from the time period specified by the preceding parameter 0 07 024, shall be reported in minutes.

B/C 1.10.2.2.1

The duration of sunshine over the previous hour shall be reported by national decision. When reported,

it shall be included in the first replication.

B/C 1.10.2.2.2

The duration of sunshine over the previous 24 hours shall, by regional decision, be reported at all stations capable of doing so and included at either 0000 UTC, 0600 UTC, 1200 UTC or 1800 UTC. When reported, it shall be included in the second replication. [12.4.7.4.2]

B/C 1.10.3 Precipitation measurement <3 02 040>

B/C 1.10.3.1 Height of sensor above local ground

Height of sensor above local ground (0 07 032) for precipitation measurement shall be reported in meters (with precision in hundredths of a meter).

This datum represents the actual height of the rain gauge rim above ground at the point where the rain gauge is located.

B/C 1.10.3.2 Period of reference for amount precipitation

Time period (0 04 024) for amount of precipitation shall be reported as *a negative value* in hours. It shall be determined

(a) by regional decision (e.g. -6, -12, -24) in the first replication,

(b) by national decision (e.g. -1, -3) in the second replication.

B/C 1.10.3.3 Total amount of precipitation

Total amount of precipitation, which has fallen during the period of reference for amount of precipitation, shall be reported in kilograms per square meter (with precision in tenths of a kilogram per square meter).

B/C 1.10.3.3.1

Precipitation, when it can be and has to be reported, shall be reported as 0.0 kgm^{-2} if no precipitation were observed during the referenced period. [12.2.5.4]

B/C 1.10.3.3.2

Trace shall be reported as "- 0.1 kgm^{-2} ".

B/C 1.10.4 Extreme temperature data <3 02 041>

B/C 1.10.4.1 Height of sensor above local ground

Height of sensor above local ground (0 07 032) for temperature measurement shall be reported in meters (with precision in hundredths of a meter).

This datum represents the actual height of temperature sensor(s) above ground at the point where the sensors are located.

B/C 1.10.4.2 Periods of reference for extreme temperatures

Time period for maximum temperature and time period for minimum temperature (0 04 024) shall be determined by regional decision and reported as *negative values* in hours. [12.4.4]

Notes:

(1) If the period for maximum temperature or the period for minimum temperature ends at the nominal time of report, the second value of 0 04 024 shall be reported as 0.

(2) If the period for maximum temperature or the period for minimum temperature does not end at the nominal time of report, the first value of 0 04 024 shall indicate the beginning of the period of reference and the second value of 0 04 024 shall indicate the end of the period of reference. E.g. to

report the maximum temperature for the previous calendar day from a station in RA IV, value of the first 0 04 024 shall be set to – 30 and value of the second 0 04 024 shall be set to – 6, provided that the nominal time of the report 12 UTC corresponds to 6 a.m. local time.

B/C 1.10.4.3 Maximum and minimum temperature

Maximum and minimum temperature shall be reported in degrees Kelvin (with precision in hundredths of a degree Kelvin); if produced in CREX, in degrees Celsius (with precision in hundredths of a degree Celsius). Extreme temperature data shall be reported with precision in hundredths of a degree even if they are measured with the accuracy in tenths of a degree.

Note:

(1) Notes (1) and (2) under Regulation B/C 1.4.1.2 shall apply.

B/C 1.10.5 Wind data <3 02 042>

B/C 1.10.5.1 Height of sensor above local ground

Height of sensor above local ground (0 07 032) for wind measurement shall be reported in meters (with precision in hundredths of a meter).

This datum represents the actual height of the sensors above ground at the point where the sensors are located.

B/C 1.10.5.2 Type of instrumentation for wind measurement - Flag table 0 02 002

This datum shall be used to specify whether the wind speed was measured by certified instruments (bit No. 1 set to 1) or estimated on the basis of the Beaufort wind scale (bit No. 1 set to 0), and to indicate the original units for wind speed measurement. Bit No. 2 set to 1 indicates that wind speed was originally measured in knots and bit No. 3 set to 1 indicates that wind speed was originally measured in kilometers per hour. Setting both bits No.2 and No.3 to 0 indicates that wind speed was originally measured in meters per second.

In CREX, type of instrumentation for wind measurement (0 02 002) shall be reported in octal representation. For example, if wind speed was measured by instruments in knots (bit No.1 and bit No.2 set to 1), then this datum shall be reported as 14.

B/C 1.10.5.3 Wind direction and speed

The mean direction and speed of the wind over the 10-minute period immediately preceding the observation shall be reported. The time period (0 04 025) shall be included as -10. However, when the 10-minute period includes a discontinuity in the wind characteristics, only data obtained after the discontinuity shall be used for reporting the mean values, and hence the period (0 04 025) in these circumstances shall be correspondingly reduced. [12.2.2.3.1]

The time period is preceded by a time significance qualifier (0 08 021) that shall be set to 2 (Time averaged).

The wind direction (0 11 001) shall be reported in degrees true and the wind speed (0 11 002) shall be reported in meters per second (with precision in tenths of a meter per second).

B/C 1.10.5.3.1

In the absence of wind instruments, the wind speed shall be estimated on the basis of the Beaufort wind scale. The Beaufort number obtained by estimation is converted into meters per second by use of the

relevant wind speed equivalent column on the Beaufort scale, and this speed is reported for wind speed. [12.2.2.3.2]

B/C 1.10.5.4 Maximum wind gust direction and speed

Time period for maximum wind gust direction and speed (0 04 025) shall be determined by regional or national decision and reported as a negative value in minutes.

Direction of the maximum wind gust (0 11 043) shall be reported in degrees true and speed of the maximum wind gust (0 11 041) shall be reported in meters per second (with precision in tenths of meters per second).

B/C 1.11 Evaporation data <3 02 044>

B/C 1.11.1 Period of reference for evaporation data

Evaporation or evapotranspiration during the previous 24 hours shall be reported. Time period in hours (0 04 024) shall be included as -24.

B/C 1.11.2 Indicator of type of instrument for evaporation measurement or the type of crops – Code table 0 02 004

B/C 1.11.3 Evaporation or evapotranspiration

Amount of either evaporation or evapotranspiration (0 13 033) shall be reported in kilograms per square meter (with precision in tenths of a kilogram per square meter) at 0000 UTC, 0600 UTC or 1200 UTC. [12.4.7.2.2]

B/C 1.12 Radiation data <1 01 002><3 02 045>

B/C 1.12.1 Period of reference for radiation data

Radiation integrated over the previous hour and over the previous 24 hours may be reported. Time period in hours (0 04 024) shall be included as follows:

(a) one hour in the first replication (reported as -1);
(b) 24 hours in the second replication (reported as -24).

B/C 1.12.2 Amount of radiation

If included, amount of radiation integrated over the time period specified by the preceding parameter 0 07 024 shall be reported in joules per square meter (with precision in thousands of a joule per square meter for radiation type (1) and (2); with precision in ten-thousands of a joule per square meter for radiation type (3); with precision in hundreds of a joule per square meter for radiation types (4) to (6)).

B/C 1.12.2.1

The radiation data may take one or more of the following forms:

(a) Long-wave radiation (0 14 002); the positive sign shall be used to specify downward long-wave radiation and the negative sign to specify upward long-wave radiation;
(b) Short-wave radiation (0 14 004);

(c) Net radiation (0 14 016); the corresponding sign shall be used to specify positive and negative net radiation);
(d) Global solar radiation (0 14 028);
(e) Diffuse solar radiation (0 14 029);
(f) Direct solar radiation (0 14 030).

[12.4.7.4.3], [12.4.7.4.4]

B/C 1.13 Temperature change <3 02 046>

This information is required by regional or national decision from islands or other widely separated stations.

B/C 1.13.1 Period of reference for temperature change

The temperature change shall be reported for the period of time between the time of the observation and the time of the occurrence of temperature change. To construct the required period, time period 0 04 024 shall be included twice; the first one corresponding to period covered by past weather (1) and past weather (2), the second one specified by the time of the occurrence of temperature change. Both values of 0 04 024 shall be negative and expressed in hours.

Note:

(1) The period is the number of whole hours, disregarding the minutes. For example, if the time of occurrence is 45 minutes after the time of the observation, the time period is considered to be zero hours. If the time of occurrence is 1 hour or more, but less than 2 hours after the observation, the time period go shall be considered to be 1 hour, etc.

B/C 1.13.2 Temperature change over period specified

Temperature change (0 12 049) shall be reported in degrees Kelvin in BUFR, in degrees Celsius in CREX.

B/C 1.13.2.1

For a change of temperature to be reported, the change shall be equal to or more than 5° C and occur in less than 30 minutes during the period covered by past weather (1) and past weather (2). [12.4.7.3]

B/C 1.14 "Period" data required by regional or national reporting practices

If regional reporting practices in a Region require inclusion of additional "period" parameters, the corresponding "regional" common sequence (see the Annex) shall be supplemented by relevant descriptors. If national reporting practices require inclusion of additional "period" parameters, either the common sequence 3 07 080 or any of the common sequences 3 07 081 to 3 07 086, whichever is the most convenient, shall be supplemented by relevant descriptors

Note:

(1) "Period" parameter is a parameter that is coupled to a time period descriptor, e.g. 0 04 024, 0 04 025.
(2) No additional "period" parameters are currently required by regional regulations for SYNOP data in the *Manual on Codes*, WMO-No. 306, Volume II.

ANNEX to B/C1 – Regulations for reporting SYNOP data in TDCF

Regional regulations for reporting SYNOP data in BUFR/CREX

TM 307081 - BUFR template for synoptic reports from fixed land stations suitable for SYNOP data in compliance with reporting practices in RA I

3 07 081:

3 01 090	Fixed surface station identification, time, horizontal and vertical coordinates	Unit, scale
3 02 031	Pressure data	
3 02 035	Basic synoptic "instantaneous" data	
3 02 036	Clouds with bases below station level	
3 02 047	Direction of cloud drift	
0 08 002	Vertical significance (= missing to cancel the previous value)	Code table, 0
3 02 048	Direction and elevation of cloud	
3 02 037	State of ground, snow depth, ground minimum temperature (past 12 hours)	
0 12 122	Ground minimum temperature of the preceding night $s_nT_gT_g$	K, 2
0 13 056	Character and intensity of precipitation R_c	Code table, 0
0 13 057	Time of beginning or end of precipitation R_t	Code table, 0
0 20 101	Locust (acridian) name L_n	Code table, 0
0 20 102	Locust (maturity) color L_c	Code table, 0
0 20 103	Stage of development of locusts L_d	Code table, 0
0 20 104	Organization state of swarm or band of locusts L_g	Code table, 0
0 20 105	Size of swarm or band of locusts and duration of passage of swarm s_L	Code table, 0
0 20 106	Locust population density d_L	Code table, 0
0 20 107	Direction of movements of locust swarm D_L	Code table, 0
0 20 108	Extent of vegetation v_e	Code table, 0
3 02 043	Basic synoptic "period" data	
3 02 044	Evaporation data	
1 01 002	Replicate next descriptor 2 times	
3 02 045	Radiation data (from 1 hour and/or 24 hour period)	
3 02 046	Temperature change	

Regulations:

General

(i) BUFR template TM 307081 shall not be mandatory for Member States in Region I. Either the template TM 307080 or any of the templates TM 307081 to TM 307086, whichever is the most convenient, may be used.

(ii) Regulations **B/C 1.1** to **B/C 1.9**, inclusive, shall apply.

(iii) Regulations **B/C 1.10** to **B/C 1.14**, inclusive, shall apply.

B/C 1.9.1 "Instantaneous" data required by reporting practices in RA I

B/C 1.9.1.1 Ground minimum temperature of the preceding night

Ground minimum temperature of the preceding night (0 12 122) shall be reported in degrees Kelvin (with precision in hundredths of a degree Kelvin); if produced in CREX, in degrees Celsius (with precision in hundredths of a degree Celsius).

Notes (1), (2) and (3) under Regulation B/C 1.8.3 shall apply.

This datum shall be reported by all Members at 0600 UTC. [1/12.6.1]

B/C 1.9.1.2 Character, intensity and time of beginning or end of precipitation

Character and intensity of precipitation (Code table 0 13 056) and Time of beginning or end of precipitation (Code table 0 13 057) shall be reported by all Members at 0600 UTC to meet requirements of agrometerological monitoring in the Region. [1/12.6.1] Inclusion of these data into reports at 0000 and 1200 UTC shall be left to national decision. [1/12.6.3]

B/C 1.9.1.3 Locust control-related observations

Following data shall be reported by all Members capable of doing so:

(a) Locust (acridian) name (Code table 0 20 101),
(b) Locust (maturity) color (Code table 0 20 102),
(c) Stage of development of locusts (Code table 0 20 103),
(d) Organization state of swarm or band of locusts (Code table 0 20 104),
(e) Size of swarm or band of locusts and duration of passage of swarm (Code table 0 20 105),
(f) Locust population density (Code table 0 20 106),
(g) Direction of movements of locust swarm (Code table 0 20 107),
(h) Extent of vegetation (Code table 0 20 108). [1/12.14.1]

TM 307082 - BUFR template for synoptic reports from fixed land stations suitable for SYNOP data in compliance with reporting practices in RA II

3 07 082:

3 01 090	Fixed surface station identification, time, horizontal and vertical coordinates	Unit, scale
3 02 031	Pressure data	
3 02 035	Basic synoptic “instantaneous” data	
3 02 036	Clouds with bases below station level	
3 02 047	Direction of cloud drift	
0 08 002	Vertical significance (= missing to cancel the previous value)	Code table, 0
3 02 048	Direction and elevation of cloud	
3 02 037	State of ground, snow depth, ground minimum temperature (past 12 hours)	
0 12 121	Ground minimum temperature (at the time of observation) $\mathbf{s_nT'_gT'_g}$	K, 2
0 12 122	Ground minimum temperature of the preceding night $\mathbf{s_nT_gT_g}$	K, 2
3 02 043	Basic synoptic “period” data	
3 02 044	Evaporation data	
1 01 002	Replicate next descriptor 2 times	
3 02 045	Radiation data (from 1 hour and/or 24 hour period)	
3 02 046	Temperature change	

Regulations:

General

(i) BUFR template TM 307082 shall not be mandatory for Member States in Region II. Either the template TM 307080 or any of the templates TM 307081 to TM 307086, whichever is the most convenient, may be used.

(ii) Regulations **B/C 1.1** to **B/C 1.9**, inclusive, shall apply.

(iii) Regulations **B/C 1.10** to **B/C 1.14**, inclusive, shall apply.

B/C 1.9.2 "Instantaneous" data required by reporting practices in RA II

B/C 1.9.2.1 Ground minimum temperature at the time of observation

Ground minimum temperature measured at the time of observation (0 12 121) shall be reported in degrees Kelvin (with precision in hundredths of a degree Kelvin); if produced in CREX, in degrees Celsius (with precision in hundredths of a degree Celsius).

Notes (1) and (2) under Regulation B/C 1.8.3 shall apply.

Inclusion of this datum into reports at least at 0000 and 1200 UTC shall be left to national decision. [2/12.6.1]

B/C 1.9.2.2 Ground minimum temperature of the preceding night

Ground minimum temperature of the preceding night (0 12 122) shall be reported in degrees Kelvin (with precision in hundredths of a degree Kelvin); if produced in CREX, in degrees Celsius (with precision in hundredths of a degree Celsius).

Notes (1), (2) and (3) under Regulation B/C 1.8.3 shall apply.

TM 307083 - BUFR template for synoptic reports from fixed land stations suitable for SYNOP data in compliance with reporting practices in RA III

3 07 083:

3 01 090	Fixed surface station identification, time, horizontal and vertical coordinates	Unit, scale
3 02 031	Pressure data	
3 02 035	Basic synoptic "instantaneous" data	
3 02 036	Clouds with bases below station level	
3 02 047	Direction of cloud drift	
0 08 002	Vertical significance (= missing to cancel the previous value)	Code table, 0
3 02 048	Direction and elevation of cloud	
3 02 037	State of ground, snow depth, ground minimum temperature (past 12 hours)	
0 12 122	Ground minimum temperature of the preceding night $\mathbf{s_nT_gT_g}$	K, 2
3 02 043	Basic synoptic "period" data	
3 02 044	Evaporation data	
1 01 002	Replicate next descriptor 2 times	
3 02 045	Radiation data (from 1 hour and/or 24 hour period)	
3 02 046	Temperature change	

Regulations:

General

(i) BUFR template TM 307083 shall not be mandatory for Member States in Region III. Either the template TM 307080 or any of the templates TM 307081 to TM 307086, whichever is the most convenient, may be used.

(ii) Regulations **B/C 1.1** to **B/C 1.9**, inclusive, shall apply.

(iii) Regulations **B/C 1.10** to **B/C 1.14**, inclusive, shall apply.

B/C 1.9.3 "Instantaneous" data required by reporting practices in RA III

B/C 1.9.3.1 Ground minimum temperature of the preceding night

Ground minimum temperature of the preceding night (0 12 122) shall be reported in degrees Kelvin (with precision in hundredths of a degree Kelvin); if produced in CREX, in degrees Celsius (with precision in hundredths of a degree Celsius).

Notes (1), (2) and (3) under Regulation B/C 1.8.3 shall apply.

This datum shall be included into reports at 1200 UTC, if possible. [3/12.7.2]

TM 307084 - BUFR template for synoptic reports from fixed land stations suitable for SYNOP data in compliance with reporting practices in RA IV

3 07 084:

3 01 090	Fixed surface station identification, time, horizontal and vertical coordinates	Unit, scale
3 02 031	Pressure data	
3 02 035	Basic synoptic "instantaneous" data	
3 02 036	Clouds with bases below station level	
3 02 047	Direction of cloud drift	
0 08 002	Vertical significance (= missing to cancel the previous value)	Code table, 0
3 02 048	Direction and elevation of cloud	
3 02 037	State of ground, snow depth, ground minimum temperature (past 12 hours)	
0 20 055	State of sky in tropics **C_S**	Code table, 0
1 01 000	Delayed replication of 1 descriptor	
0 31 001	Delayed descriptor replication factor	Numeric, 0
2 05 001	Character field of 1 character	CCITT IA5, 0
3 02 043	Basic synoptic "period" data	
3 02 044	Evaporation data	
1 01 002	Replicate next descriptor 2 times	
3 02 045	Radiation data (from 1 hour and/or 24 hour period)	
3 02 046	Temperature change	

Regulations:

General

(i) BUFR template TM 307084 shall not be mandatory for Member States in Region IV. Either the template TM 307080 or any of the templates TM 307081 to TM 307086, whichever is the most convenient, may be used.

(ii) Regulations **B/C 1.1** to **B/C 1.9**, inclusive, shall apply.

(iii) Regulations **B/C 1.10** to **B/C 1.14**, inclusive, shall apply.

B/C 1.9.4 "Instantaneous" data required by reporting practices in RA IV

B/C 1.9.4.1 State of sky in tropics

State of sky in tropics (Code table 0 02 055) shall be reported only by stations in the southern part of Region IV, below 1000 m elevation and within 500 kilometers of the shore, and only during the part of the year in which tropical weather is observed. Direction of cloud drift shall be reported using sequence 3 02 047. [4/12.4.2]

B/C 1.9.4.2 Additional information in plain language

Information in plain language shall be reported as a character field, using delayed replication of the operator descriptor 2 05 001. The value of the delayed replication factor 0 31 001 shall correspond with the number of characters required for the reported information (space characters included). For example, if the word TORNADO is included in the report (tornado has been observed at, or within sight of, the station [4/12.14.1]), delayed replication factor 0 31 001 shall be set to 7.

M 307086 - BUFR template for synoptic reports from fixed land stations suitable for SYNOP data in compliance with reporting practices in RA VI

3 07 086:

3 01 090		Fixed surface station identification, time, horizontal and vertical coordinates	Unit, scale
3 02 031		Pressure data	
3 02 035		Basic synoptic “instantaneous” data	
3 02 036		Clouds with bases below station level	
0 08 002		Vertical significance (= missing to cancel the previous value)	
3 02 037		State of ground, snow depth, ground minimum temperature	
3 02 066		**Dangerous weather phenomena**	
		Groups 919$M_W D_a$ and 96119 in SYNOP	
	0 20 023	Other weather phenomena **M_W** (1= Dust/sand whirl, 9= Funnel clouds not touching surface, 10 = Funnel clouds touching surface, 12 = Water-spout)	Flag table, 0
	0 20 024	Intensity of phenomena (1= Light, 2 = Moderate, 3 = Heavy, 4 = Violent)	Code table, 0
	0 20 027	Phenomenon occurrence (1=At time of observation, 3=In time period for past weather)	Flag table, 0
	0 20 054	True direction from which a phenomenon or clouds are moving **D_a**	Degree true, 0
		Group 918$s_q D_p$ in SYNOP	
	0 20 023	Other weather phenomena (2 = Squalls) **s_q**	Flag table, 0
	0 20 027	Phenomenon occurrence (1=At time of observation, 3=In time period for past weather)	Flag table, 0
	0 20 054	True direction from which a phenomenon or clouds are moving **D_p**	Degree true, 0
		Group 929$S_8 S'_8$ in SYNOP	
	0 20 025	Obscuration (13 = Snow)	Flag table, 0
	0 20 026	Character of obscuration (5= Low drifting, 6= Blowing) **S_8**	Code table, 0
	0 20 027	Phenomenon occurrence (1=At time of observation, 3=In time period for past weather)	Flag table, 0
	0 20 040	Evolution of drift of snow **S'_8**	Code table, 0
		Group 932RR	
	0 20 066	Maximum diameter of hailstones **RR**	m, 3
	0 20 027	Phenomenon occurrence (1=At time of observation, 3=In time period for past weather)	Flag table, 0

		Groups 934RR- 937RR in SYNOP	
	0 20 021	Type of precipitation (15=Glaze, 16=Rime, 20=Wet snow)	Flag table, 0
	0 20 067	Diameter of deposit **RR**	m, 3
	0 20 027	Phenomenon occurrence (1=At time of observation, 3=In time period for past weather)	Flag table, 0
3 02 043		Basic synoptic "period" data	
3 02 044		Evaporation data	
1 01 002		Replicate next descriptor 2 times	
3 02 045		Radiation data (from 1 hour and/or 24 hour period)	

Note:

Groups $56D_LD_MD_H$, $57CD_ae_C$ and $54g_0s_nd_T$ are not used in RA VI and therefore the corresponding sequence descriptors 3 02 047, 3 02 048 and 3 02 046 are not included in the RA VI regional template for SYNOP data.

Regulations:

General

(i) BUFR template TM 307086 shall not be mandatory for Member States in Region VI. Either the template TM 307080 or any of the templates TM 307081 to TM 307086, whichever is the most convenient, may be used.

(ii) Regulations **B/C 1.1** to **B/C 1.9**, inclusive, shall apply.

(iii) Regulations **B/C 1.10** to **B/C 1.14**, inclusive, shall apply.

B/C 1.9.6 "Instantaneous" data required by reporting practices in RA VI

B/C 1.9.6.1 Dangerous weather phenomena

Sequence 3 02 066 should be used for regional exchange of data on dangerous phenomena. Reporting of other phenomena shall be left to national decision. [6/12.12.2]

B/C 1.9.6.1.1 Tornado, water spout, whirlwinds and dust devils

Tornadoes, water spouts, whirlwinds and dust devils between observation times shall be reported using two parameters: Other weather phenomena (Flag table 0 20 023) and Intensity of phenomena (Code table 0 20 024). Occurrence of the phenomenon (Flag table 0 20 027) shall be specified by setting bit No. 3 to 1 (In time period for past weather).

B/C 1.9.6.1.2 Squall

Squalls between observation times shall be reported using Flag table 0 20 023 (bit No.2 set to 1). Occurrence of the phenomenon (Flag table 0 20 027) shall be specified by setting bit No. 3 to 1 (In time period for past weather). True direction from which the squall approaches the station (0 20 054) shall be reported in degrees true.

B/C 1.9.6.1.3 Drifting and blowing snow

Drifting and blowing snow shall be reported using two parameters: Obscuration (Flag table 0 20 025) and Character of obscuration (Code table 0 26 026). Occurrence of the phenomenon (Flag table 0 20 027) shall be specified by setting to 1 either bit No. 1 (At time of observation) or bit No. 3 (In time

period for past weather) or both. Evolution of drift of snow shall be reported using Code table 0 20 040.

B/C 1.9.6.1.4 Maximum diameter of hailstones

Maximum diameter of hailstones (0 20 066) shall be reported in meters (with precision in thousandths of a meter). Occurrence of the phenomenon (Flag table 0 20 027) shall be specified by setting to 1 either bit No. 1 (At time of observation) or bit No. 3 (In time period for past weather) or both.

B/C 1.9.6.1.5 Frozen deposit

Diameter of frozen deposit (0 20 067) shall be reported in meters (with precision in thousandths of a meter). The preceding entry Type of precipitation (Flag table 0 20 021) shall specify type of the frozen deposit, i.e. bit No. 15 set to 1 shall indicate deposit of glaze, bit No. 16 set to 1 shall indicate deposit of rime and bit No. 20 set to 1 shall indicate deposit of wet snow; compound deposit shall be indicated by at least two of the above mentioned bits set to 1. Occurrence of the phenomenon (Flag table 0 20 027) shall be specified by setting to 1 either bit No. 1 (At time of observation) or bit No. 3 (In time period for past weather) or both.

B/C5 – Regulations for reporting SYNOP MOBIL data in TDCF

TM 307090 - BUFR template for synoptic reports from mobile land stations suitable for SYNOP MOBIL data

3 07 090		**Sequence for representation of synoptic reports from a mobile land station suitable for SYNOP MOBIL data**
	3 01 092	Mobile surface station identification, time, horizontal and vertical coordinates
	3 02 031	Pressure data
	3 02 035	Basic synoptic “instantaneous” data
	3 02 036	Clouds with bases below station level
	3 02 047	Direction of cloud drift
	0 08 002	Vertical significance
	3 02 048	Direction and elevation of cloud
	3 02 037	State of ground, snow depth, ground minimum temperature
	3 02 043	Basic synoptic “period” data
	3 02 044	Evaporation data
	1 01 002	Replicate next descriptor 2 times
	3 02 045	Radiation data (from 1 hour and/or 24 hour period)
	3 02 046	Temperature change

This BUFR template for synoptic reports from mobile land stations further expands as follows:

3 01 092			**Mobile surface station identification, time, horizontal and vertical coordinates**	Unit, scale
	0 01 011		Mobile land station identifier **D….D**	CCITT IA5, 0
	0 01 003		WMO Region number **A_1**	Code table, 0
	0 02 001		Type of station **(i_x)**	Code table, 0
	3 01 011	0 04 001	Year	Year, 0
		0 04 002	Month	Month, 0
		0 04 003	Day **YY**	Day, 0
	3 01 012	0 04 004	Hour **GG**	Hour, 0

		0 04 005	Minute **gg**	Minute, 0
	3 01 021	0 05 001	Latitude (high accuracy) $\mathbf{L_aL_aL_a}$	Degree, 5
		0 06 001	Longitude (high accuracy) $\mathbf{L_oL_oL_oL_o}$	Degree, 5
	0 07 030		Height of station ground above mean sea level	m, 1
	0 07 031		Height of barometer above mean sea level	m, 1
	0 33 024		Station elevation quality mark $\mathbf{i_m}$	Code table, 0
3 02 031			**Pressure data**	
	3 02 001	0 10 004	Pressure $\mathbf{P_0P_0P_0P_0}$	Pa, –1
		0 10 051	Pressure reduced to mean sea level **PPPP**	Pa, –1
		0 10 061	3-hour pressure change **ppp**	Pa, –1
		0 10 063	Characteristic of pressure tendency **a**	Code table, 0
	0 10 062		24-hour pressure change $\mathbf{p_{24}p_{24}p_{24}}$	Pa, –1
	0 07 004		Pressure (standard level) $\mathbf{a_3}$	Pa, –1
	0 10 009		Geopotential height of the standard level **hhh**	gpm, 0
3 02 035			**Basic synoptic "instantaneous" data**	
			Temperature and humidity data	
	3 02 032	0 07 032	Height of sensor above local ground (for temperature and humidity measurement)	m, 2
		0 12 101	Temperature/dry-bulb temperature(sc.2) $\mathbf{s_nTTT}$	K, 2
		0 12 103	Dew-point temperature (scale 2) $\mathbf{s_nT_dT_dT_d}$	K, 2
		0 13 003	Relative humidity	%, 0
			Visibility data	
	3 02 033	0 07 032	Height of sensor above local ground (for visibility measurement)	m, 2
		0 20 001	Horizontal visibility **VV**	m, –1
			Precipitation past 24 hours	
	3 02 034	0 07 032	Height of sensor above local ground (for precipitation measurement)	m, 2
		0 13 023	Total precipitation past 24 hours $\mathbf{R_{24}R_{24}R_{24}R_{24}}$	kg m^{-2}, 1
	0 07 032		Height of sensor above local ground (set to missing to cancel the previous value)	m, 2
			Cloud data	
	3 02 004	0 20 010	Cloud cover (total) **N**	%, 0
		0 08 002	Vertical significance	Code table, 0
		0 20 011	Cloud amount (of low or middle clouds) $\mathbf{N_h}$	Code table, 0
		0 20 013	Height of base of cloud **h**	m, –1
		0 20 012	Cloud type (low clouds C_L) $\mathbf{C_L}$	Code table, 0
		0 20 012	Cloud type (middle clouds C_M) $\mathbf{C_M}$	Code table, 0
		0 20 012	Cloud type (high clouds C_H) $\mathbf{C_H}$	Code table, 0
			Individual cloud layers or masses	
	1 01 000		Delayed replication of 1 descriptor	
	0 31 001		Delayed descriptor replication factor	Numeric, 0
	3 02 005	0 08 002	Vertical significance	Code table, 0
		0 20 011	Cloud amount (N_s) $\mathbf{N_s}$	Code table, 0
		0 20 012	Cloud type (C) **C**	Code table, 0
		0 20 013	Height of base of cloud (h_sh_s) $\mathbf{h_sh_s}$	m, -1
			Clouds with bases below station level	
3 02 036	1 05 000		Delayed replication of 5 descriptors	
	0 31 001		Delayed descriptor replication factor	Numeric, 0
	0 08 002		Vertical significance	Code table, 0
	0 20 011		Cloud amount **N'**	Code table, 0
	0 20 012		Cloud type **C'**	Code table, 0
	0 20 014		Height of top of cloud **H'H'**	m, -1

	0 20 017		Cloud top description $\mathbf{C_t}$	Code table, 0
			Direction of cloud drift gr. $\mathbf{56D_LD_MD_H}$	
3 02 047	1 02 003		Replicate 2 descriptors 3 times	
	0 08 002		Vertical significance = 7 (low cloud) = 8 (middle cloud) = 9 (high cloud)	Code table, 0
	0 20 054		True direction from which clouds are moving $\mathbf{D_L, D_M, D_H}$	Degree true, 0
0 08 002			Vertical significance (set to missing to cancel the previous value)	Code table, 0
			Direction and elevation of cloud gr. $\mathbf{57CD_ae_C}$	
3 02 048	0 05 021		Bearing or azimuth $\mathbf{D_a}$	Degree true, 2
	0 07 021		Elevation angle $\mathbf{e_C}$	Degree, 2
	0 20 012		Cloud type **C**	Code table, 0
	0 05 021		Bearing or azimuth (set to missing to cancel the previous value)	Degree true, 2
	0 07 021		Elevation angle (set to missing to cancel the previous value)	Degree, 2
			State of ground, snow depth, ground minimum temperature	
3 02 037	0 20 062		State of ground (with or without snow) **E** or **E'**	Code table, 0
	0 13 013		Total snow depth **sss**	m, 2
	0 12 113		Ground minimum temperature (scale2), past 12 hours $\mathbf{s_nT_gT_g}$	K, 2
3 02 043			**Basic synoptic "period" data**	
			Present and past weather	
	3 02 038	0 20 003	Present weather **ww**	Code table, 0
		0 04 024	Time period in hours	Hour, 0
		0 20 004	Past weather (1) $\mathbf{W_1}$	Code table, 0
		0 20 005	Past weather (2) $\mathbf{W_2}$	Code table, 0
			Sunshine data (from 1 hour and 24 hour period)	
	1 01 002		Replicate 1 descriptors 2 times	
	3 02 039	0 04 024	Time period in hours	Hour, 0
		0 14 031	Total sunshine **SS** and **SSS**	Minute, 0
			Precipitation measurement	
	3 02 040	0 07 032	Height of sensor above local ground (for precipitation measurement)	m, 2
		1 02 002	Replicate next 2 descriptors 2 times	
		0 04 024	Time period in hours $\mathbf{t_R}$	Hour, 0
		0 13 011	Total precipitation / total water equivalent of snow **RRR**	kg m^{-2}, 1
			Extreme temperature data	
	3 02 041	0 07 032	Height of sensor above local ground (for temperature measurement)	m, 2
		0 04 024	Time period or displacement	Hour, 0
		0 04 024	Time period or displacement (see Notes 1 and 2)	Hour, 0
		0 12 111	Maximum temperature (scale 2) at height and over period specified $\mathbf{s_nT_xT_xT_x}$	K, 2
		0 04 024	Time period or displacement	Hour, 0
		0 04 024	Time period or displacement (see Note 2)	Hour, 0
		0 12 112	Minimum temperature (scale 2) at height and over period specified $\mathbf{s_nT_nT_nT_n}$	K, 2
			Wind data	
	3 02 042	0 07 032	Height of sensor above local ground (for wind measurement)	m, 2
		0 02 002	Type of instrumentation for wind measurement $\mathbf{i_w}$	Flag table, 0

		0 08 021	Time significance (= 2 (time averaged))	Code table, 0
		0 04 025	Time period (= - 10 minutes, or number of minutes after a significant change of wind)	Minute, 0
		0 11 001	Wind direction **dd**	Degree true, 0
		0 11 002	Wind speed **ff**	m s^{-1}, 1
		0 08 021	Time significance (= missing value)	Code table, 0
		1 03 002	Replicate next 3 descriptors 2 times	
		0 04 025	Time period in minutes	Minute, 0
		0 11 043	Maximum wind gust direction	Degree true, 0
		0 11 041	Maximum wind gust speed 910$\mathbf{f_m f_m}$, 911$\mathbf{f_x f_x}$	m s^{-1}, 1
	0 07 032		Height of sensor above local ground (set to missing to cancel the previous value)	m, 2
			Evaporation data	
3 02 044	0 04 024		Time period in hours	Hour, 0
	0 02 004		Type of instrument for evaporation or crop type for evapotranspiration $\mathbf{i_E}$	Code table, 0
	0 13 033		Evaporation /evapotranspiration **EEE**	kg m^{-2}, 1
			Radiation data (from 1 hour and 24 hour period)	
1 01 002			Replicate next descriptor 2 times	
3 02 045	0 04 024		Time period in hours	Hour, 0
	0 14 002		Long-wave radiation, integrated over period specified 553SS 4**FFFF** or 553SS 5**FFFF,** 55SSS 4$\mathbf{F_{24}F_{24}F_{24}F_{24}}$ or 55SSS 5$\mathbf{F_{24}F_{24}F_{24}F_{24}}$	J m^{-2}, -3
	0 14 004		Short-wave radiation, integrated over period specified 553SS 6**FFFF,** 55SSS 6$\mathbf{F_{24}F_{24}F_{24}F_{24}}$	J m^{-2}, -3
	0 14 016		Net radiation, integrated over period specified 553SS 0**FFFF** or 553SS 1**FFFF,** 55SSS 0$\mathbf{F_{24}F_{24}F_{24}F_{24}}$ or 55SSS 1$\mathbf{F_{24}F_{24}F_{24}F_{24}}$	J m^{-2}, -4
	0 14 028		Global solar radiation (high accuracy), integrated over period specified 553SS 2**FFFF,** 55SSS 2$\mathbf{F_{24}F_{24}F_{24}F_{24}}$	J m^{-2}, -2
	0 14 029		Diffuse solar radiation (high accuracy), integrated over period specified 553SS 3**FFFF,** 55SSS 3$\mathbf{F_{24}F_{24}F_{24}F_{24}}$	J m^{-2}, -2
	0 14 030		Direct solar radiation (high accuracy), integrated over period specified 55408 4**FFFF,** 55508 5$\mathbf{F_{24}F_{24}F_{24}F_{24}}$	J m^{-2}, -2
3 02 046			**Temperature change** group **54**$\mathbf{g_0 s_n d_T}$	
	0 04 024		Time period or displacement	Hour, 0
	0 04 024		Time period or displacement (see Note 3)	Hour, 0
	0 12 049		Temperature change over period specified $\mathbf{s_n d_T}$	K, 0

Notes:

1) Within RA-IV, the maximum temperature at 1200 UTC is reported for the previous calendar day (i.e. the ending time of the period is not equal to the nominal time of the report). To construct the required time range, descriptor 004024 has to be included two times. If the period ends at the nominal time of the report, value of the second 004024 shall be set to 0.

2) Within RA-III, the maximum day-time temperature and the minimum night-time temperature is reported (i.e. the ending time of the period may not be equal to the nominal time of the report). To construct the required time range,

descriptor 004024 has to be included two times. If the period ends at the nominal time of the report, value of the second 004024 shall be set to 0.

3) To construct the required time range, descriptor 004024 has to be included two times.

Regulations:

B/C 5.1	Section 1 of BUFR or CREX
B/C 5.2	Mobile station identification, time, horizontal and vertical coordinates
B/C 5.3	Pressure data
B/C 5.4	Basic synoptic “instantaneous” data
B/C 5.4.1	Temperature and humidity data
B/C 5.4.2	Visibility data
B/C 5.4.3	Precipitation past 24 hours
B/C 5.4.4	Cloud data
B/C 5.4.5	Individual cloud layers or masses
B/C 5.5	Clouds with bases below station level
B/C 5.6	Direction of cloud drift
B/C 5.7	Direction and elevation of cloud
B/C 5.8	State of ground, snow depth, ground minimum temperature
B/C 5.9	“Instantaneous” data required by regional or national reporting practices
B/C 5.10	Basic synoptic “period” data
B/C 5.10.1	Present and past weather
B/C 5.10.2	Sunshine data
B/C 5.10.3	Precipitation measurement
B/C 5.10.4	Extreme temperature data
B/C 5.10.5	Wind data
B/C 5.11	Evaporation data
B/C 5.12	Radiation data
B/C 5.13	Temperature change
B/C 5.14	“Period” data required by regional or national reporting practices

B/C 5.1 Section 1 of BUFR or CREX

B/C 5.1.1 Entries required in Section 1 of BUFR

The following entries shall be included in BUFR Section 1:

-BUFR master table,
-identification of originating/generating centre,
-identification of originating/generating sub-centre,
-update sequence number,
-identification of inclusion of optional section,
-data category (= 000 for SYNOP MOBIL data),
-international data sub-category [(1), (2)],
-local data subcategory,
-version number of master table,
-version number of local tables,
-year (year of the century up to BUFR edition 3),
-month (standard time),

-day (standard time = YY in the abbreviated telecommunication header for SYNOP MOBIL data),
-hour (standard time = GG in the abbreviated telecommunication header for SYNOP MOBIL data),
-minute (standard time = 00 for SYNOP MOBIL data).

Notes:
(1) Inclusion of this entry is required starting with BUFR edition 4.
(2) If required, the international data sub-category shall be included for SYNOP MOBIL data as
= 005 at main synoptic times 00, 06, 12, 18 UTC,
= 004 at intermediate synoptic times 03, 09, 15, 21 UTC,
= 003 at observation times 01, 02, 04, 05, 07, 08, 10, 11, 13, 14, 16, 17, 19, 20, 22 and 23 UTC.

B/C 5.1.2 Entries required in Section 1 of CREX

The following entries shall be included in CREX Section 1:
-CREX master table,
-CREX edition number,
-CREX table version number,
-version number of BUFR master table (1),
-version number of local tables (1),
-data category (= 000 for SYNOP MOBIL data),
-international data sub-category (1), (2),
-identification of originating/generating centre (1),
-identification of originating/generating sub-centre (1),
-update sequence number (1),
-number of subsets (1),
-year (standard time) (1),
-month (standard time) (1),
-day (standard time = YY in the abbreviated telecommunication header for SYNOP MOBIL data) (1),
-hour (standard time = GG in the abbreviated telecommunication header for SYNOP MOBIL data) (1),
-minute (standard time = 00 for SYNOP MOBIL data) (1).

Notes:
(1) Inclusion of these entries is required starting with CREX edition 2.
(2) If inclusion of international data sub-category is required, Note (2) under B/C 5.1.1 applies.

B/C 5.2 Mobile station identification, time, horizontal and vertical coordinates <3 01 092>

B/C 5.2.1 Mobile station identification

Mobile land station identifier (0 01 011) shall be always reported as a non-missing value. In the absence of a suitable call sign, the word MOBIL shall be used for mobile land station identifier. [12.1.7(c)]

WMO regional number (0 01 003) shall be reported to indicate the geographical area in which the mobile station has been deployed.

Type of station (Code table 0 02 001) shall be reported to indicate the type of the station operation (manned, automatic or hybrid).

Note:

(1) If a station operates as a manned station for a part of the day and as an automatic station for the rest of the day, code figure 2 (Hybrid) may be used in all reports. It is preferable, however, to use code figure 1 (Manned) in reports produced under the supervision of an observer, and a code figure 0 (Automatic) in reports produced while the station operates in the automatic mode.

B/C 5.2.2 Time of observation

Year (0 04 001), month (0 04 002), day (0 04 003), hour (0 04 004) and minute (0 04 005) of the actual time of observation shall be reported.

Note:

(1) The actual time of observation shall be the time at which the barometer is read. [12.1.6]

B/C 5.2.2.1

If the actual time of observation differs by 10 minutes or less from the standard time reported in Section 1, the standard time may be reported instead of the actual time of observation. [12.2.8]

B/C 5.2.3 Horizontal and vertical coordinates

Latitude (0 05 001) and longitude (0 06 001) of the station shall be reported in degrees with precision in 10^{-5} of a degree.

Height of station ground above mean sea level (0 07 030) and height of barometer above mean sea level (0 07 031) shall be reported in meters with precision in tenths of a meter.

B/C 5.2.4 Station elevation quality mark – Code table 0 33 024

Station elevation quality mark shall be reported to indicate the accuracy of the vertical coordinates of the mobile station.

B/C 5.3 Pressure data <3 02 031>

B/C 5.3.1 Pressure at the station level

Pressure at the station level (0 10 004), i.e. at the level defined by 0 07 031 (height of barometer above mean sea level), shall be reported in pascals (with precision in tens of a pascal).

B/C 5.3.1.1

The station pressure shall be included in reports for global exchange from land stations, together with either the mean sea level pressure or, in accordance with Regulation B/C 5.3.5.1, with the geopotential height of a standard pressure level. [12.2.4]

Note:

(1) Inclusion of the station pressure at other times is left to the decision of individual Members.

B/C 5.3.2 Pressure reduced to mean sea level

Pressure reduced to mean sea level (0 10 051) shall be reported in pascals (with precision in tens of a

pascal).

B/C 5.3.2.1

Whenever air pressure at mean sea level can be computed with reasonable accuracy, this pressure shall be reported. [12.2.3.4.1]

Notes:

(1) For a station situated in a region of normal synoptic network density, the pressure at mean sea level is considered not to be computed with reasonable accuracy when it introduces a deformation into the analysis of the horizontal pressure field, which is purely local and recurring.

(2) For a station lying in a data-sparse area of the synoptic network, reasonable accuracy will be obtained when using a reduction method,which has proved to be satisfactory in a region of normal network density and under similar geographic conditions.

B/C 5.3.3 Three-hour pressure change and characteristic of pressure tendency

Amount of pressure change at station level, during the three hours preceding the time of observation (0 10 061), either positive, zero *or negative*, shall be reported in pascals (with precision in tens of a pascal).

B/C 5.3.3.1

Unless specified otherwise by regional decision, pressure tendency shall be included whenever the three-hourly pressure tendency is available. [12.2.3.5.1]

B/C 5.3.3.2

The characteristic of pressure tendency (Code table 0 10 063) over the past three hours shall, whenever possible, be determined on the basis of pressure samples at equi-spaced intervals not exceeding one hour. [12.2.3.5.2]

Note:

(1) Algorithms for selecting the appropriate code figure are included in publication WMO–No.8, Guide to Meteorological Instruments and Methods of Observation.

B/C 5.3.3.3

Where it is not possible to apply the algorithms specified in Regulation B/C 5.3.3.2 in reports from automatic weather stations, the characteristic of pressure tendency shall be reported as 2 when the tendency is positive, as 7 when the tendency is negative, and as 4 when the atmospheric pressure is the same as three hours before. [12.2.3.5.3]

B/C 5.3.4 24-hour pressure change

If specified by regional decision, amount of surface pressure change at station level, during 24 hours preceding the time of observation (0 10 062), either positive, zero or negative, shall be reported in pascals (with precision in tens of a pascal). [12.4.7.1.2(k), (l)]

B/C 5.3.5 Geopotential height of the standard level

Geopotential height of the standard level (0 10 009) shall be reported in geopotential meters. The standard isobaric level is specified by the preceding entry Pressure (0 07 004).

B/C 5.3.5.1

By regional decision, a high-level station which cannot give pressure at mean sea level to a satisfactory degree of accuracy shall report both the station-level pressure and the geopotential height of an agreed standard isobaric surface. [12.2.3.4.2]

B/C 5.4 Basic synoptic “instantaneous” data <3 02 035>

B/C 5.4.1 Temperature and humidity data <3 02 032>

B/C 5.4.1.1 Height of sensor above local ground

Height of sensor above local ground (0 07 032) for temperature and humidity measurement shall be reported in meters (with precision in hundredths of a meter).

This datum represents the actual height of temperature and humidity sensors above ground at the point where the sensors are located.

B/C 5.4.1.2 Dry-bulb air temperature

Dry-bulb air temperature (0 12 101) shall be reported in degrees Kelvin (with precision in hundredths of a degree Kelvin); if produced in CREX, in degrees Celsius (with precision in hundredths of a degree Celsius)

Notes:

(1) Temperature data shall be reported with precision in hundredths of a degree even if they are measured with the accuracy in tenths of a degree. This requirement is based on the fact that conversion from the Kelvin to the Celsius scale has often resulted into distortion of the data values.

(2) Temperature t (in degrees Celsius) shall be converted into temperature T (in degrees Kelvin) using equation: T = t + 273.15.

B/C 5.4.1.2.1

When the data are not available as a result of a temporary instrument failure, this quality shall be included as a missing value. [12.2.3.2]

B/C 5.4.1.3 Dew-point temperature

Dew-point temperature (0 12 103) shall be reported in degrees Kelvin (with precision in hundredths of a degree Kelvin); if produced in CREX, in degrees Celsius (with precision in hundredths of a degree Celsius).

Note:

(1) Notes (1) and (2) under Regulation B/C 5.4.1.2 shall apply.

B/C 5.4.1.3.1

When the data are not available as a result of a temporary instrument failure, this quality shall be included as a missing value. [12.2.3.3.2]

B/C 5.4.1.4 Relative humidity

Relative humidity (0 13 003) shall be reported in units of a percent.

B/C 5.4.1.4.1

Both dew point temperature and relative humidity shall be reported when available.

B/C 5.4.2 Visibility data <3 02 033>

B/C 5.4.2.1 Height of sensor above local ground

Height of sensor above local ground (0 07 032) for visibility measurement shall be reported in meters (with precision in hundredths of a meter).

This datum represents the actual height of visibility sensors above ground at the point where the sensors are located. If visibility is estimated by a human observer, average height of observer's eyes above station ground shall be reported.

B/C 5.4.2.2 Horizontal visibility

Horizontal visibility (0 20 001) at surface shall be reported in meters (with precision in tens of a meter).

B/C 5.4.2.2.1

When the horizontal visibility is not the same in different directions, the shortest distance shall be given for visibility. [12.2.1.3.1]

B/C 5.4.3 Precipitation past 24 hours <3 02 034>

B/C 5.4.3.1 Height of sensor above local ground

Height of sensor above local ground (0 07 032) for precipitation measurement shall be reported in meters (with precision in hundredths of a meter).

This datum represents the actual height of the rain gauge rim above ground at the point where the rain gauge is located.

B/C 5.4.3.2 Total amount of precipitation during the 24-hour period

Total amount of precipitation during the 24-hour period ending at the time of observation (0 13 023) shall be reported in kilograms per square meter (with precision in tenths of a kilogram per square meter). [12.4.9]

B/C 5.4.3.2.1

The precipitation over the past 24 hours shall be included (not missing) at least once a day at one appropriate time of the main standard times (0000, 0600, 1200, 1800 UTC). [12.4.1]

B/C 5.4.3.2.2

Precipitation, when it can be and has to be reported, shall be reported as 0.0 kgm^{-2} if no precipitation were observed during the referenced period. [12.2.5.4]

B/C 5.4.3.2.3

Trace shall be reported as "- 0.1 kgm^{-2} ".

B/C 5.4.4 Cloud data <3 02 004>

B/C 5.4.4.1 Total cloud cover

Total cloud cover (0 20 010) shall embrace the total fraction of the celestial dome covered by clouds irrespective of their genus. It shall be reported in *units of a percent*.

Note:

(1) Total cloud cover shall be reported as 113 when sky is obscured by fog and/or other meteorological phenomena.

B/C 5.4.4.1.1

Total cloud cover shall be reported as actually seen by the observer during the observation. [12.2.2.2.1]

B/C 5.4.4.1.2

Altocumulus perlucidus or Stratocumulus perlucidus ("mackerel sky") shall be reported *as 99% or less* (unless overlying clouds appear to cover the whole sky) since breaks are always present in this cloud form even if it extends over the whole celestial dome. [12.2.2.2.2]

B/C 5.4.4.1.3

Total cloud cover shall be reported as zero when blue sky or stars are seen through existing fog or other analogous phenomena without any trace of cloud being seen. [12.2.2.2.3]

B/C 5.4.4.1.4

When clouds are observed through fog or analogous phenomena, their amount shall be evaluated and reported as if these phenomena were non-existent. [12.2.2.2.4]

B/C 5.4.4.1.5

Total cloud cover shall not include the amount resulting from rapidly dissipating condensation trails. [12.2.2.2.5]

B/C 5.4.4.1.6

Persistent condensation trails and cloud masses which have obviously developed from condensation trails shall be reported as cloud. [12.2.2.2.6]

B/C 5.4.4.2 Vertical significance – Code table 0 08 002

To specify vertical significance (0 08 002) within the sequence 3 02 004, a code figure shall be selected in the following way:

(a) If low clouds are observed, then code figure 7 (Low cloud) shall be used.

(b) If there are no low clouds but middle clouds are observed, then code figure 8 (Middle clouds) shall be used.

(c) If there are no low and there are no middle clouds but high clouds are observed, then code figure 0 shall be used.

(d) If sky is obscured by fog and/or other phenomena, then code figure 5 (Ceiling) shall be used.

(e) If there are no clouds (clear sky), then code figure 62 (Value not applicable) shall be used.

(f) If the cloud cover is not discernible for reasons other than (d) above or observation is not made, then code figure 63 (Missing value) shall be used.

B/C 5.4.4.3 Cloud amount (of low or middle clouds) – Code table 0 20 011

Amount of all the low clouds (clouds of the genera Stratocumulus, Stratus, Cumulus, and Cumulonimbus) present or, if no low clouds are present, the amount of all the middle clouds (clouds of the genera Altocumulus, Altostratus, and Nimbostratus) present.

B/C 5.4.4.3.1

Cloud amount shall be reported as follows:

(a) If there are low clouds, then the total amount of all low clouds, as actually seen by the observer during the observation shall be reported for the cloud amount.

(b) If there are no low clouds but there are middle clouds, then the total amount of the middle clouds shall be reported for the cloud amount.

(c) If there are no low clouds and there are no middle clouds but there are high clouds (clouds of the genera Cirrus, Cirrocumulus, and Cirrostratus), then the cloud amount shall be reported as zero. [12.2.7.2.1]

B/C 5.4.4.3.2

Amount of Altocumulus perlucidus or Stratocumulus perlucidus (“mackerel sky”) shall be reported using code figure 7 or less since breaks are always present in this cloud form even if it extends over the whole celestial dome. [12.2.7.2.2]

B/C 5.4.4.3.3

When the clouds reported for cloud amount are observed through fog or an analogous phenomenon, the cloud amount shall be reported as if these phenomena were not present. [12.2.7.2.3]

B/C 5.4.4.3.4

If the clouds reported for cloud amount include contrails, then the cloud amount shall include the amount of persistent contrails. Rapidly dissipating contrails shall not be included in the value for the cloud amount. [12.2.7.2.4]

B/C 5.4.4.4 Height of base of lowest cloud

Height above surface of the base (0 20 013) of the lowest cloud seen shall be reported in meters (with precision in tens of a meter).

Note:

(1) The term "height above surface" shall be considered as being the height above the official aerodrome elevation or above station elevation at a non-aerodrome station.

B/C 5.4.4.4.1

When the station is in fog, a sandstorm or in blowing snow but the sky is discernable, the base of the lowest cloud shall refer to the base of the lowest cloud observed, if any. When, under the above conditions, the sky is not discernible, the base of the lowest cloud shall be reported as missing. [12.2.1.2]

B/C 5.4.4.4.2

When no cloud are reported (Total cloud cover = 0) the base of the lowest cloud *shall be reported as a missing value.*

B/C 5.4.4.4.3

When, by national decision, clouds with bases below the station are reported from the station and clouds with bases below and tops above the station are observed, the base of the lowest cloud *shall be reported having a negative value if the base of cloud is discernible, or as a missing value.*

B/C 5.4.4.5 Cloud type of low, middle and high clouds - Code table 0 20 012

Clouds of the genera Stratocumulus, Stratus, Cumulus, and Cumulonimbus (low clouds) shall be reported for the first entry 0 20 012, clouds of the genera Altocumulus, Altostratus, and Nimbostratus (middle clouds) shall be reported for the second entry 0 20 012 and clouds of the genera Cirrus, Cirrocumulus, and Cirrostratus (high clouds) shall be reported for the third entry 0 20 012.

B/C 5.4.4.5.1

The reporting of type of low, middle and high clouds shall be as specified in publication WMO-NO. 407 – International Cloud Atlas, Volume I. [12.2.7.3]

B/C 5.4.5 Individual cloud layers or masses

B/C 5.4.5.1 Number of individual cloud layers or masses

The number of individual cloud layers or masses shall be indicated by Delayed descriptor replication factor 0 31 001 in BUFR and by a four-digit number in the Data Section corresponding to the position of the replication descriptor in the Data Description Section of CREX.

Notes:

(1) The number of cloud layers or masses shall never be set to a missing value.

(2) The number of cloud layers or masses shall be set to a positive value in a NIL report.

B/C 5.4.5.1.1

The number of individual cloud layers or masses shall in the absence of Cumulonimbus clouds not exceed three. Cumulonimbus clouds, when observed, shall always be reported, so that the total number of individual cloud layers or masses can be four. The selection of layers (or masses) to be reported shall be made in accordance with the following criteria:

(a) The lowest individual layer (or mass) of any amount (cloud amount at least one octa or less, but not zero);

(b) The next higher individual layer (or mass) the amount of which is greater than two octas;

(c) The next higher individual layer (or mass) the amount of which is greater than four octas;

(d) Cumulonimbus clouds, whenever observed and not reported under (a), (b) and (c) above. [12.4.10.1]

B/C 5.4.5.1.2

When the sky is clear, the number of individual cloud layers or masses shall be set to zero.

B/C 5.4.5.1.3

The order of reporting the individual cloud layers or masses shall always be from lower to higher levels. [12.4.10.2]

B/C 5.4.5.2 Individual cloud layer or mass <3 02 005>

Each cloud layer or mass shall be represented by the following four parameters: Vertical significance (0 08 002), amount of individual cloud layer or mass (0 20 011), type of cloud layer or mass (0 20 012) and height of base of individual cloud layer or mass (0 20 013).

B/C 5.4.5.2.1 Vertical significance – Code table 0 08 002

To specify vertical significance (0 08 002) within the sequence 3 02 005, a code figure shall be selected in the following way:

(a) Code figure 1 shall be used in the first non-Cumulonimbus layer.

(b) Code figure 2 shall be used in the second non-Cumulonimbus layer.

(c) Code figure 3 shall be used in the third non-Cumulonimbus layer.

(d) Code figure 4 shall be used in any Cumulonimbus layer.

(e) If sky is obscured by fog and/or other phenomena, then code figure 5 (Ceiling) shall be used.

(f) If the cloud cover is not discernible for reasons other than (e) above or observation is not made, then code figure 63 (Missing value) shall be used.

B/C 5.4.5.2.2 Cloud amount, type and height of base

B/C 5.4.5.2.2.1

When the sky is clear, in accordance with Regulation B/C 5.4.5.1.2 cloud amount, genus, and height shall not be included. [12.4.10.4]

B/C 5.4.5.2.2.2

In determining cloud amounts (Code table 0 20 011) to be reported for individual layers or masses, the observer shall estimate, by taking into consideration the evolution of the sky, the cloud amounts of each individual layer or mass at the different levels, as if no other clouds existed. [12.4.10.3]

B/C 5.4.5.2.2.3

Type of a cloud layer or mass (Code table 0 20 012) shall be reported using code figures 0, 1, 2, 3, 4, 5, 6, 7, 8, 9, 59 and 63.

B/C 5.4.5.2.2.4

If, notwithstanding the existence of fog, sandstorm, duststorm, blowing snow or other obscuring phenomena, the sky is discernible, the partially obscuring phenomena shall be disregarded. If, under the above conditions, the sky is not discernible, the cloud type shall be reported using *code figure 59* and the cloud height shall be replaced by vertical visibility. [12.4.10.5]

Note:

(1) The vertical visibility is defined as the vertical visual range into an obscuring medium.

B/C 5.4.5.2.2.5

If two or more types of cloud occur with their bases at the same level and this level is one to be reported in accordance with Regulation B/C 5.4.5.1.1, the selection for cloud type and amount shall be made with the following criteria:

(a) If these types do not include Cumulonimbus then cloud genus shall refer to the cloud type that represents the greatest amount, or if there are two or more types of cloud all having the same amount, the highest applicable code figure for cloud genus shall be reported. Cloud amount shall refer to the total amount of cloud whose bases are all at the same level;

(b) If these types do include Cumulonimbus then one layer shall be reported to describe only this type with cloud genus indicated as Cumulonimbus and the cloud amount as the amount of the Cumulonimbus. If the total amount of the remaining type(s) of cloud (excluding Cumulonimbus) whose bases are all at the same level is greater than that required by Regulation B/C 5.4.5.1.1, then another layer shall be reported with type being selected in accordance with (a) and amount referring to the total amount of the remaining cloud (excluding Cumulonimbus). [12.4.10.6]

B/C 5.4.5.2.2.6

Regulations B/C5.4.4.1.3 to B/C5.4.4.1.6, inclusive, shall apply. [12.4.10.7]

B/C 5.4.5.2.2.7

Height above surface of the cloud base (0 20 013) shall be reported in meters (with precision in tens of a meter).

Note:

(1) The term "height above surface" shall be considered as being the height above the official aerodrome elevation or above station elevation at a non-aerodrome station.

B/C 5.5 Clouds with bases below station level <3 02 036>

B/C 5.5.1 Number of cloud layers with bases below station level

The number of cloud layers with bases below station level shall be indicated by Delayed descriptor replication factor 0 31 001 in BUFR and by a four-digit number in the Data Section corresponding to the position of the replication descriptor in the Data Description Section of CREX.

Notes:

(1) The number of cloud layers with bases below station level shall never be set to a missing value.

(2) The number of cloud layers with bases below station level shall be set to a positive value in a NIL report.

B/C 5.5.1.1

Inclusion of these data shall be determined by national decision. The number of cloud layers with bases below station level shall be always set to zero in reports from a station at which observations of clouds with bases below station level are not executed.

B/C 5.5.1.2

When no cloud layers with bases below station are observed, the number of cloud layers with bases below station level shall be set to zero.

B/C 5.5.1.3

If the station is in continuous or almost continuous cloud, the number of cloud layers with bases below

station level shall be set to one, with all parameters reported as missing except for vertical significance 0 08 002 that shall be set to 10 (cloud layer with a base below and tops above station level). [12.5.4]

B/C 5.5.1.4

If clouds with bases below station level are not discernible due to fog and/or other phenomena or observation is not made, then the number of cloud layers with bases below station level shall be set to one, with all parameters reported as missing except for vertical significance 0 08 002 that shall be set to 11.

B/C 5.5.1.5

When two or more cloud layers with their bases below station level occur at different levels, two or more cloud layers shall be reported. [12.5.5]

B/C 5.5.1.6

Clouds with bases below and tops above station level shall be reported as the first layer within the sequence 3 02 036, provided that the station is out of cloud sufficiently frequently to enable the various features to be recognized. Other low clouds present with tops below station level shall be reported as the following layers (one or more) within the sequence 3 02 036. [12.5.3]

Notes:

(1) Clouds with bases below and tops above station level shall be reported also in sequences 3 02 004 and 3 02 005. [12.5.3]

(2) Clouds with tops below station level shall be reported only in sequence 3 02 036, and any co-existent clouds with bases above station level shall be reported only in sequences 3 02 004 and 3 02 005. [12.5.2]

B/C 5.5.2 Individual cloud layer with base below station level

Each cloud layer with base below station level shall be represented by the following five parameters: Vertical significance (0 08 002), amount of clouds with base below station level (0 20 011), type of clouds with base below station level (0 20 012), altitude of the upper surface of clouds (0 20 014) and cloud top description (0 20 017).

B/C 5.5.2.1 Vertical significance - Code table 0 08 002

Code figure 10 shall be used for cloud layers with bases below and tops above station level; code figure 11 shall be used for cloud layers with bases and tops below station level.

B/C 5.5.2.2 Amount of clouds with base below station level - Code table 0 20 011

B/C 5.5.2.2.1

Regulations B/C 5.4.4.1.1 to B/C 5.4.4.1.6, inclusive, shall apply. [12.5.8]

B/C 5.5.2.2.2

Spaces occupied by mountains emerging from the cloud layers shall be counted as occupied by clouds. [12.5.9]

B/C 5.5.2.3 Type of clouds with base below station level - Code table 0 20 012

Type of clouds with bases below station level shall be reported using code figures 0, 1, 2, 3, 4, 5, 6, 7, 8, 9 and 63.

B/C 5.5.2.4 Height of top of clouds above mean sea level

Height of top of clouds above mean sea level (0 20 014) shall be reported in meters (with precision in tens of a meter).

B/C 5.5.2.4.1

Height of top of clouds with bases below and tops above station level shall be reported, provided that the upper surface of clouds can be observed. [12.5.3 (b)]

B/C 5.5.2.5 Cloud top description - Code table 0 20 017

B/C 5.5.2.5.1

Description of top of clouds with bases below and tops above station level shall be reported, provided that the station is out of cloud sufficiently frequently to enable the features to be recognized.

B/C 5.5.2.5.2

Rapidly dissipating condensation trails shall not be reported. However, the top of persistent condensation trails and cloud masses which have obviously developed from condensation trails (and whose bases are below station level) shall be reported in Sequence 3 02 036. [12.5.6], [12.5.7]

B/C 5.6 Direction of cloud drift <3 02 047>

This information is required from land stations mainly in the tropics. [12.4.7.5]

B/C 5.6.1 Vertical significance – Code table 0 08 002

To specify vertical significance (0 08 002) within the sequence 3 02 047, code figures shall be selected in the following way:

(a) Code figure 7 (Low cloud) shall be used in the first replication.

(b) Code figure 8 (Middle clouds) shall be used in the second replication.

(c) Code figure 9 (High cloud) shall be used in the third replication.

B/C 5.6.2 True direction from which clouds are moving

True direction from which low, middle, or high clouds are moving (0 20 054) shall be reported in degrees true as follows:

(a) True direction from which the low clouds are moving shall be included in the first replication.

(b) True direction from which the middle clouds are moving shall be included in the second replication.

(c) True direction from which the high clouds are moving shall be included in the third replication.

B/C 5.7 Direction and elevation of cloud <3 02 048>

This information is required from land stations mainly in the tropics. [12.4.7.5]

B/C 5.7.1 Direction of cloud

True direction (0 05 021), from which orographic clouds or clouds with vertical development are seen, shall be *reported in degrees true*. The cloud genus shall be specified by the third entry of the sequence 3 02 048, i.e. by Cloud type – Code table 0 20 012.

Note:

(1) It is considered sufficient to report direction of cloud in degrees true, although 0 05 021 (Bearing or azimuth) is defined with higher accuracy (hundredths of a degree true).

B/C 5.7.2 Elevation of cloud

Elevation angle (0 07 021) of the top of the cloud shall be reported in degrees. The cloud genus shall be specified by the following entry, i.e. by Cloud type – Code table 0 20 012.

Note:

(1) It is considered sufficient to report elevation of the top of cloud in degrees, although 0 07 021 (Elevation angle) is defined with higher accuracy (hundredths of a degree).

B/C 5.8 State of ground, snow depth, ground minimum temperature <3 02 037>

B/C 5.8.1 State of ground (with or without snow) - Code table 0 20 062.

State of ground without snow or with snow shall be reported using Code table 0 20 062. The synoptic hour at which this datum is reported shall be determined by regional decision.

B/C 5.8.2 Total snow depth

Total snow depth (0 13 013) shall be reported in meters (with precision in hundredths of a meter). The synoptic hour at which this datum is reported shall be determined by regional decision.

B/C 5.8.2.1

When total snow depth has to be reported, it is reported as 0.00 m if no snow, ice and other forms of solid precipitation on the ground are observed at the time of observation. A snow depth value of "– 0.01 m" shall indicate a little (less than 0.005 m) snow. A snow depth value of "– 0.02 m" shall indicate "snow cover not continuous".

B/C 5.8.2.2

The measurement shall include snow, ice and all other forms of solid precipitation on the ground at the time of observation. [12.4.6.1]

B/C 5.8.2.3

When the depth is not uniform, the average depth over a representative area shall be reported. [12.4.6.2]

B/C 5.8.3 Ground minimum temperature, past 12 hours

Ground minimum temperature from the previous 12 hours (0 12 113) shall be reported in degrees Kelvin (with precision in hundredths of a degree Kelvin); if produced in CREX, in degrees Celsius (with precision in hundredths of a degree Celsius).

Notes:

(1) Ground minimum temperature data shall be reported with precision in hundredths of a degree even if they are measured with the accuracy in tenths of a degree. Notes (1) and (2) under Regulation B/C 5.4.1.2 shall apply.

(2) The period of time covered by ground minimum temperature and the synoptic hour at which this temperature is reported shall be determined by regional decision. If ground minimum temperature is to be reported from the period of previous night, then "ground minimum temperature, past 12 hours" (0 12 113) shall be reported as a missing value. In this case, ground minimum temperature of the previous night (0 12 122) shall be reported in compliance with Regulation B/C 5.9.

B/C 5.9 "Instantaneous" data required by regional or national reporting practices

If regional or national reporting practices require inclusion of additional "instantaneous" parameters, the sequence descriptor 3 07 090 shall not be used. In this case BUFR/CREX template for SYNOP MOBIL data shall be used in its first level expanded form and the descriptors, corresponding to the required "instantaneous" parameters, shall be inserted to precede 3 02 043 (Basic synoptic "period" data).

Notes:

(1) "Instantaneous" parameter is a parameter that is not coupled to a time period descriptor, e.g. 0 04 024, 0 04 025.

(2) No regional requirements are currently indicated for reporting SYNOP MOBIL data in the *Manual on Codes*, WMO-No. 306, Volume II.

B/C 5.10 Basic synoptic "period" data <3 02 043>

B/C 5.10.1 Present and past weather <3 02 038>

B/C 5.10.1.1

Present weather (Code table 0 20 003) and past weather (1) (Code table 0 20 004) and past weather (2) (Code table 0 20 005) shall be reported as non-missing values if present and past conditions are known. In case of a report from a manually operated station after a period of closure or at start up, when past weather conditions for the period applicable to the report are unknown, past weather (1) and past weather (2) reported as missing shall indicate that previous conditions are unknown. This regulation shall also apply to automatic reporting stations with the facility to report present and past weather. [12.2.6.1]

B/C 5.10.1.2

Code figures 0, 1, 2, 3, 100, 101, 102 and 103 for present weather and code figures 0, 1, 2 and 10 for past weather (1) and past weather (2) shall be considered to represent phenomena without significance. [12.2.6.2]

B/C 5.10.1.3

Present and past weather shall be *reported if observation was made (data available), regardless significance of the phenomena.*

Note:

(1) If data are produced and collected in traditional codes and present weather and past weather is omitted in a SYNOP report (no significant phenomena observed), code figure 508 shall be used for present weather and code figure 10 for past weather (1) and past weather (2) when converted into BUFR or CREX.

B/C 5.10.1.4

If no observation was made (data not available), code figure 509 shall be used for present weather and both past weather (1) and past weather (2) shall be reported as missing.

B/C 5.10.1.5 Present weather from a manned weather station

B/C 5.10.1.5.1

If more than one form of weather is observed, the highest applicable code figure from the range <00 to 99> shall be selected for present weather. Code figure 17 shall have precedence over code figures 20 – 49. Other weather may be reported using additional entries 0 20 003 or 0 20 021 to 0 20 026 applying Regulation B/C 5.9. [12.2.6.4.1]

B/C 5.10.1.5.2

In coding 01, 02, or 03, there is no limitation on the magnitude of the change of the cloud amount. Code figures 00, 01, and 02 can each be used when the sky is clear at the time of observation. In this case, the following interpretation of the specifications shall apply:

- 00 is used when the preceding conditions are not known,
- 01 is used when the clouds have dissolved during the past hour,
- 02 is used when the sky has been continuously clear during the past hour. [12.2.6.4.2]

B/C 5.10.1.5.3

When the phenomenon is not predominantly water droplets, the appropriate code figure shall be selected without regard to visibility. [12.2.6.4.3]

B/C 5.10.1.5.4

The code figure 05 shall be used when the obstruction to vision consists predominantly of lithometeors.

[12.2.6.4.4]

B/C 5.10.1.5.5

National instructions shall be used to indicate the specifications for code figures 07 and 09. [12.2.6.4.5]

B/C 5.10.1.5.6

The visibility restrictions on code figure 10 shall be 1000 meters or more. The specification refers only to water droplets and ice crystals. [12.2.6.4.6]

B/C 5.10.1.5.7

For code figures 11 or 12 to be reported, the apparent visibility shall be less than 1000 meters. [12.2.6.4.7]

B/C 5.10.1.5.8

For code figure 18, the following criteria for reporting squalls shall be used:

(a) When wind speed is measured: A sudden increase of wind speed of at least eight meters per second, the speed rising to 11 meters per second or more and lasting for at least one minute;

(b) When the Beaufort scale is used for estimating wind speed: A sudden increase of wind speed by at least three stages of the Beaufort scale, the speed rising to force 6 or more and lasting for at least one minute. [12.2.6.4.8]

B/C 5.10.1.5.9

Code figures 20 – 29 shall never be used when precipitation is observed at the time of observation. [12.2.6.4.9]

B/C 5.10.1.5.10

For code figure 28, visibility shall have been less than 1000 meters.

Note:

(1) The specification refers only to visibility restrictions which occurred as a result of water droplets or ice crystals. [12.2.6.4.10]

B/C 5.10.1.5.11

For synoptic coding purposes, a thunderstorm shall be regarded as being at the station from the time thunder is first heard, whether or not lightning is seen or precipitation is occurring at the station. A thunderstorm shall be reported if thunder is heard within the normal observational period preceding the time of the report. A thunderstorm shall be regarded as having ceased at the time thunder is first heard and the cessation is confirmed if thunder is not heard for 10 – 15 minutes after this time. [12.2.6.4.11]

B/C 5.10.1.5.12

The necessary uniformity in reporting code figures 36, 37, 38, and 39, which may be desirable within certain regions, shall be obtained by means of national instructions. [12.2.6.4.12]

B/C 5.10.1.5.13

A visibility restriction “less than 1000 meters” shall be applied to code figures 42 – 49. In the case of code figures 40 or 41, the apparent visibility in the fog or ice fog patch or bank shall be less than 1000 meters. Code figures 40 – 47 shall be used when the obstructions to vision consist predominantly of water droplets or ice crystals, and 48 or 49 when the obstructions consist predominantly of water droplets. [12.2.6.4.13]

B/C 5.10.1.5.14

When referring to precipitation, the phrase “at the station” in the code table shall mean “at the point where the observation is normally taken”. [12.2.6.4.14]

B/C 5.10.1.5.15

The precipitation shall be encoded as intermittent if it has been discontinuous during the preceding hour, without presenting the character of a shower. [12.2.6.4.15]

B/C 5.10.1.5.16

The intensity of precipitation shall be determined by the intensity at the time of the observation. [12.2.6.4.16]

B/C 5.10.1.5.17

Code figures 80 – 89 shall be used only when the precipitation is of the shower type and takes place at the time of the observation.

Note:

(1) Showers are produced by convective clouds. They are characterized by their abrupt beginning and end and by the generally rapid and sometimes great variations in the intensity of the precipitation. Drops and solid particles falling in a shower are generally larger than those falling in non-showery precipitation. Between showers openings may be observed unless stratiform clouds fill the intervals between the cumuliform clouds. [12.2.6.4.17]

B/C 5.10.1.5.18

In reporting code figure 98, the observer shall be allowed considerable latitude in determining whether precipitation is or is not occurring, if it is not actually visible. [12.2.6.4.18]

B/C 5.10.1.6 Present weather from an automatic weather station

B/C 5.10.1.6.1

The highest applicable code figure shall be selected. [12.2.6.5.1]

B/C 5.10.1.6.2

In coding code figures 101, 102, and 103, there is no limitation on the magnitude of the change of the cloud amount. Code figures 100, 101, and 102 can each be used when the sky is clear at the time of observation. In this case, the following interpretation of the specifications shall apply:

- Code figure 100 is used when the preceding conditions are not known;
- Code figure 101 is used when the clouds have dissolved during the past hour;
- Code figure 102 is used when the sky has been continuously clear during the past hour. [12.2.6.5.2]

B/C 5.10.1.6.3

When the phenomenon is not predominantly water droplets, the appropriate code figure shall be selected without regard to the visibility. [12.2.6.5.3]

B/C 5.10.1.6.4

The code figures 104 and 105 shall be used when the obstruction to vision consists predominantly of lithometeors. [12.2.6.5.4]

B/C 5.10.1.6.5

The visibility restriction on code figure 110 shall be 1000 meters or more. The specification refers only to water droplets and ice crystals. [12.2.6.5.5]

B/C 5.10.1.6.6

For code figure 118, the following criteria for reporting squalls shall be used:

A sudden increase of wind speed of at least eight meters per second, the speed rising to 11 meters per second or more and lasting for at least one minute. [12.2.6.5.6]

B/C 5.10.1.6.7

Code figures 120 – 126 shall never be used when precipitation is observed at the time of observation. [12.2.6.5.7]

B/C 5.10.1.6.8

For code figure 120, visibility shall have been less than 1000 meters.

Note:

(1) The specification refers only to visibility restrictions, which occurred as a result of water droplets or ice crystals. [12.2.6.5.8]

B/C 5.10.1.6.9

For synoptic coding purposes, a thunderstorm shall be regarded as being at the station from the time thunder is first detected, whether or not lightning is detected or precipitation is occurring at the station. A thunderstorm shall be reported in present weather if thunder is detected within the normal observational period preceding the time of the report. A thunderstorm shall be regarded as having ceased at the time thunder is last detected and the cessation is confirmed if thunder is not detected for 10 – 15 minutes after this time. [12.2.6.5.9]

B/C 5.10.1.6.10

A visibility restriction "less than 1000 meters" shall be applied to code figures 130 – 135. [12.2.6.5.10]

B/C 5.10.1.6.11

The precipitation shall be encoded as intermittent if it has been discontinuous during the preceding hour, without presenting the character of a shower. [12.2.6.5.11]

B/C 5.10.1.6.12

The intensity of precipitation shall be determined by the intensity at the time of observation. [12.2.6.5.12]

B/C 5.10.1.6.13

Code figures 180 – 189 shall be used only when the precipitation is intermittent or of the shower type and takes place at the time of observation.

Note:

(1) Showers are produced by convective clouds. They are characterized by their abrupt beginning and end and by the generally rapid and sometimes great variations in the intensity of the precipitation. Drops and solid particles falling in a shower are generally larger than those falling in non-showery precipitation. Between showers openings may be observed unless stratiform clouds fill the intervals between the cumuliform clouds. [12.2.6.5.13]

B/C 5.10.1.7 Past weather reported from a manned weather station

B/C 5.10.1.7.1 Time period

The time period (0 04 024) covered by past weather (1) and past weather (2) shall be expressed as *a negative value* in hours:

(a) Six hours, for observations at 0000, 0600, 1200, and 1800 UTC;

(b) Three hours for observations at 0300, 0900, 1500, and 2100 UTC;

(c) Two hours for intermediate observations if taken every two hours.

(d) *One hour* for intermediate observations if taken every hour. [12.2.6.6.1]

B/C 5.10.1.7.2

The code figures for past weather (1) and past weather (2) shall be selected in such a way that past and present weather together give as complete a description as possible of the weather in the time interval concerned. For example, if the type of weather undergoes a complete change during the time interval concerned, the code figures selected for past weather (1) and past weather (2) shall describe the weather prevailing before the type of weather indicated by present weather began. [12.2.6.6.2]

B/C 5.10.1.7.3

When the past weather (1) and past weather (2) are used in hourly reports, Regulation B/C 5.10.1.7.1 (d) shall apply. [12.2.6.6.3]

B/C 5.10.1.7.4

If, using Regulation B/C 5.10.1.7.2, more than one code figure may be given to past weather (1), the highest figure shall be reported for past weather (1) and the second highest code figure shall be reported for past weather (2). [12.2.6.6.4]

B/C 5.10.1.7.5

If the weather during the period has not changed so that only one code figure may be selected for past weather, then that code figure shall be reported for both past weather (1) and past weather (2). [12.2.6.6.5]

B/C 5.10.1.8 Past weather reported from an automatic weather station

B/C 5.10.1.8.1 Time period

The time period (0 04 024) covered by past weather (1) and past weather (2) shall be expressed as *a negative value* in hours:

(a) Six hours for observations at 0000, 0600, 1200, and 1800 UTC;
(b) Three hours for observations at 0300, 0900, 1500, and 2100 UTC;
(c) Two hours for intermediate observations if taken every two hours.
(d) *One hour* for intermediate observations if taken every hour. [12.2.6.7.1]

B/C 5.10.1.8.2

The code figures for past weather (1) and past weather (2) shall be selected so that the maximum capability of the automatic station to discern past weather is utilized, and so that past and present weather together give as complete a description as possible of the weather in the time interval concerned. [12.2.6.7.2]

B/C 5.10.1.8.3

In cases where the automatic station is capable only of discerning very basic weather conditions, the lower code figures representing basic and generic phenomena may be used. If the automatic station has higher discrimination capabilities, the higher code figures representing more detailed explanation of the phenomena shall be used. For each basic type of phenomenon, the highest code figure within the discrimination capability of the automatic station shall be reported. [12.2.6.7.3]

B/C 5.10.1.8.4

If the type of weather during the time interval concerned undergoes complete and discernible changes, the code figures selected for past weather (1) and past weather (2) shall describe the weather prevailing before the type of weather indicated by present weather began. The highest figure shall be reported for past weather (1) and the second highest code figure shall be reported for past weather (2). [12.2.6.7.4]

B/C 5.10.1.8.5

If a discernible change in weather has not occurred during the period, so that only one code figure may be selected for the past weather, then that code figure shall be reported for both past weather (1) and past weather (2). For example, rain during the entire period shall be reported as code figure 14 for both past weather (1) and past weather (2) in the case of an automatic station incapable of differentiating types of precipitation, or code figure 16 for both past weather (1) and past weather (2) in the case of a station with the higher discrimination capability. [12.2.6.7.5]

B/C 5.10.2 Sunshine data <1 01 002><3 02 039>

B/C 5.10.2.1 Period of reference for sunshine duration

Time period in hours (0 04 024) shall be included as follows:

(a) one hour in the first replication (reported as -1);

(b) 24 hours in the second replication (reported as -24).

B/C 5.10.2.2 Duration of sunshine

Duration of sunshine from the time period specified by the preceding parameter 0 07 024, shall be reported in minutes.

B/C 5.10.2.2.1

The duration of sunshine over the previous hour shall be reported by national decision. When reported, it shall be included in the first replication.

B/C 5.10.2.2.2

The duration of sunshine over the previous 24 hours shall, by regional decision, be reported at all stations capable of doing so and included at either 0000 UTC, 0600 UTC, 1200 UTC or 1800 UTC. When reported, it shall be included in the second replication. [12.4.7.4.2]

B/C 5.10.3 Precipitation measurement <3 02 040>

B/C 5.10.3.1 Height of sensor above local ground

Height of sensor above local ground (0 07 032) for precipitation measurement shall be reported in meters (with precision in hundredths of a meter).

This datum represents the actual height of the rain gauge rim above ground at the point where the rain gauge is located.

B/C 5.10.3.2 Period of reference for amount precipitation

Time period (0 04 024) for amount of precipitation shall be reported as *a negative value* in hours. It shall be determined

(a) by regional decision (e.g. -6, -12, -24) in the first replication,

(b) by national decision (e.g. -1, -3) in the second replication.

B/C 5.10.3.3 Total amount of precipitation

Total amount of precipitation, which has fallen during the period of reference for amount of precipitation, shall be reported in kilograms per square meter (with precision in tenths of a kilogram per square meter).

B/C 5.10.3.3.1

Precipitation, when it can be and has to be reported, shall be reported as 0.0 kgm^{-2} if no precipitation were observed during the referenced period. [12.2.5.4]

B/C 5.10.3.3.2

Trace shall be reported as "- 0.1 kgm^{-2} ".

B/C 5.10.4 Extreme temperature data <3 02 041>

B/C 5.10.4.1 Height of sensor above local ground

Height of sensor above local ground (0 07 032) for temperature measurement shall be reported in meters (with precision in hundredths of a meter).

This datum represents the actual height of temperature sensor(s) above ground at the point where the sensors are located.

B/C 5.10.4.2 Periods of reference for extreme temperatures

Time period for maximum temperature and time period for minimum temperature (0 04 024) shall be determined by regional decision and reported as *negative values* in hours. [12.4.4]

Notes:

(1) If the period for maximum temperature or the period for minimum temperature ends at the nominal time of report, the second value of 0 04 024 shall be reported as 0.

(2) If the period for maximum temperature or the period for minimum temperature does not end at the nominal time of report, the first value of 0 04 024 shall indicate the beginning of the period of reference and the second value of 0 04 024 shall indicate the end of the period of reference. E.g. to report the maximum temperature for the previous calendar day from a station in RA IV, value of the first 0 04 024 shall be set to – 30 and value of the second 0 04 024 shall be set to – 6, provided that the nominal time of the report 12 UTC corresponds to 6 a.m. local time.

B/C 5.10.4.3 Maximum and minimum temperature

Maximum and minimum temperature shall be reported in degrees Kelvin (with precision in hundredths of a degree Kelvin); if produced in CREX, in degrees Celsius (with precision in hundredths of a degree Celsius).

Note:

(1) Notes (1) and (2) under Regulation B/C 5.4.1.2 shall apply.

B/C 5.10.5 Wind data <3 02 042>

B/C 5.10.5.1 Height of sensor above local ground

Height of sensor above local ground (0 07 032) for wind measurement shall be reported in meters (with precision in hundredths of a meter).

This datum represents the actual height of the sensors above ground at the point where the sensors are located.

B/C 5.10.5.2 Type of instrumentation for wind measurement - Flag table 0 02 002

This datum shall be used to specify whether the wind speed was measured by certified instruments (bit No. 1 set to 1) or estimated on the basis of the Beaufort wind scale (bit No. 1 set to 0), and to indicate the original units for wind speed measurement. Bit No. 2 set to 1 indicates that wind speed was originally measured in knots and bit No. 3 set to 1 indicates that wind speed was originally measured in kilometers per hour. Setting both bits No.2 and No.3 to 0 indicates that wind speed was originally measured in meters per second.

B/C 5.10.5.3 Wind direction and speed

The mean direction and speed of the wind over the 10-minute period immediately preceding the observation shall be reported. The time period (0 04 025) shall be included as -10. However, when the 10-minute period includes a discontinuity in the wind characteristics, only data obtained after the discontinuity shall be used for reporting the mean values, and hence the period (0 04 025) in these circumstances shall be correspondingly reduced. [12.2.2.3.1]

The time period is preceded by a time significance qualifier (0 08 021) that shall be set to 2 (Time

averaged).

The wind direction (0 11 001) shall be reported in degrees true and the wind speed (0 11 002) shall be reported in meters per second (with precision in tenths of a meter per second).

B/C 5.10.5.3.1

In the absence of wind instruments, the wind speed shall be estimated on the basis of the Beaufort wind scale. The Beaufort number obtained by estimation is converted into meters per second by use of the relevant wind speed equivalent column on the Beaufort scale, and this speed is reported for wind speed. [12.2.2.3.2]

B/C 5.10.5.4 Maximum wind gust direction and speed

Time period for maximum wind gust direction and speed (0 04 025) shall be determined by regional or national decision and reported as a negative value in minutes.

Direction of the maximum wind gust (0 11 043) shall be reported in degrees true and speed of the maximum wind gust (0 11 041) shall be reported in meters per second (with precision in tenths of meters per second).

B/C 5.11 Evaporation data <3 02 044>

B/C 5.11.1 Period of reference for evaporation data

Evaporation or evapotranspiration during the previous 24 hours shall be reported. Time period in hours (0 04 024) shall be included as -24.

B/C 5.11.2 Indicator of type of instrument for evaporation measurement or the type of crops – Code table 0 02 004

B/C 5.11.3 Evaporation or evapotranspiration

Amount of either evaporation or evapotranspiration (0 13 033) shall be reported in kilograms per square meter (with precision in tenths of a kilogram per square meter) at 0000 UTC, 0600 UTC or 1200 UTC. [12.4.7.2.2]

B/C 5.12 Radiation data <1 01 002><3 02 045>

B/C 5.12.1 Period of reference for radiation data

Radiation integrated over the previous hour and over the previous 24 hours may be reported. Time period in hours (0 04 024) shall be included as follows:

(a) one hour in the first replication (reported as -1);
(b) 24 hours in the second replication (reported as -24).

B/C 5.12.2 Amount of radiation

If included, amount of radiation integrated over the time period specified by the preceding parameter 0 07 024 shall be reported in joules per square meter (with precision in thousands of a joule per square meter for radiation type (1) and (2); with precision in ten-thousands of a joule per

square meter for radiation type (3); with precision in hundreds of a joule per square meter for radiation types (4) to (6)).

B/C 5.12.2.1

The radiation data may take one or more of the following forms:

(a) Long-wave radiation (0 14 002); the positive sign shall be used to specify downward long-wave radiation and the negative sign to specify upward long-wave radiation;
(b) Short-wave radiation (0 14 004);
(c) Net radiation (0 14 016); the corresponding sign shall be used to specify positive and negative net radiation);
(d) Global solar radiation (0 14 028);
(e) Diffuse solar radiation (0 14 029);
(f) Direct solar radiation (0 14 030).

[12.4.7.4.3], [12.4.7.4.4]

B/C 5.13 Temperature change <3 02 046>

This information is required by regional or national decision from islands or other widely separated stations.

B/C 5.13.1 Period of reference for temperature change

The temperature change shall be reported for the period of time between the time of the observation and the time of the occurrence of temperature change. To construct the required period, time period 0 04 024 shall be included twice; the first one corresponding to period covered by past weather (1) and past weather (2), the second one specified by the time of the occurrence of temperature change. Both values of 0 04 024 shall be negative and expressed in hours.

Note:

(1) The period is the number of whole hours, disregarding the minutes. For example, if the time of occurrence is 45 minutes after the time of the observation, the time period is considered to be zero hours. If the time of occurrence is 1 hour or more, but less than 2 hours after the observation, the time period go shall be considered to be 1 hour, etc.

B/C 5.13.2 Temperature change over period specified

Temperature change (0 12 049) shall be reported in degrees Kelvin in BUFR, in degrees Celsius in CREX.

B/C 5.13.2.1

For a change of temperature to be reported, the change shall be equal to or more than 5° C and occur in less than 30 minutes during the period covered by past weather (1) and past weather (2). [12.4.7.3]

B/C 5.14 “Period” data required by regional or national reporting practices

If regional or national reporting practices require inclusion of additional “period” parameters, the common sequence 3 07 090 shall be supplemented by relevant descriptors.

Notes:

(1) “Period” parameter is a parameter that is coupled to a time period descriptor, e.g. 0 04 024, 0 04 025.
(2) No regional requirements are currently indicated for reporting SYNOP MOBIL data in the *Manual on Codes*, WMO-No. 306, Volume II.

B/C10 – Regulations for reporting SHIP data in TDCF

TM 308009 - BUFR template for synoptic reports from sea stations suitable for SHIP data

3 08 009		**Sequence for representation of synoptic reports from a sea station suitable for SHIP data**
	3 01 093	Ship identification, movement, date/time, horizontal and vertical coordinates
	3 02 001	Pressure data
	3 02 054	SHIP “instantaneous” data
	0 08 002	Vertical significance
	3 02 055	Icing and ice
	3 02 057	SHIP marine data
	3 02 060	SHIP “period” data

This BUFR template for synoptic reports from sea stations further expands as follows:

3 01 093			**Ship identification, movement, date/time, horizontal and vertical coordinates**	Unit, scale
	3 01 036	0 01 011	Ship or mobile land station identifier **D….D**	CCITT IA5, 0
		0 01 012	Direction of motion of moving observing platform(3) $\mathbf{D_s}$	Degree true, 0
		0 01 013	Speed of motion of moving observing platform(4) $\mathbf{v_s}$	m s^{-1}, 0
		0 02 001	Type of station ($\mathbf{i_x}$)	Code table, 0
		0 04 001	Year	Year, 0
		0 04 002	Month	Month, 0
		0 04 003	Day **YY**	Day, 0
		0 04 004	Hour **GG**	Hour, 0
		0 04 005	Minute **gg**	Minute, 0
		0 05 002	Latitude (coarse accuracy) $\mathbf{L_aL_aL_a}$	Degree, 2
		0 06 002	Longitude (coarse accuracy) $\mathbf{L_oL_oL_oL_o}$	Degree, 2
	0 07 030		Height of station platform above mean sea level	m, 1
	0 07 031		Height of barometer above mean sea level	m, 1
			Pressure data	
3 02 001	0 10 004		Pressure $\mathbf{P_0P_0P_0P_0}$	Pa, –1
	0 10 051		Pressure reduced to mean sea level **PPPP**	Pa, –1
	0 10 061		3-hour pressure change **ppp**	Pa, –1
	0 10 063		Characteristic of pressure tendency **a**	Code table, 0
3 02 054			**SHIP “instantaneous” data**	
			Temperature and humidity data	
	3 02 052	0 07 032	Height of sensor above marine deck platform (for temperature and humidity measurement)	m, 2
		0 07 033	Height of sensor above water surface (for temperature and humidity measurement)	m, 1
		0 12 101	Temperature/dry-bulb temperature(sc.2) $\mathbf{s_nTTT}$	K, 2
		0 02 039	Method of wet-bulb temperature measurement	Code table, 0
		0 12 102	Wet-bulb temperature (scale 2) $\mathbf{s_wT_bT_bT_b}$	K, 2
		0 12 103	Dew-point temperature (scale 2) $\mathbf{s_nT_dT_dT_d}$	K, 2
		0 13 003	Relative humidity	%, 0

			Visibility data	

	3 02 053	0 07 032	Height of sensor above marine deck platform (for visibility measurement)	m, 2
		0 07 033	Height of sensor above water surface (for visibility measurement)	m, 1
		0 20 001	Horizontal visibility **VV**	m, –1
	0 07 033		Height of sensor above water surface (set to missing to cancel the previous value)	m, 1
			Precipitation past 24 hours	
	3 02 034	0 07 032	Height of sensor above marine deck platform (for precipitation measurement)	m, 2
		0 13 023	Total precipitation past 24 hours $\mathbf{R_{24}R_{24}R_{24}R_{24}}$	kg m^{-2}, 1
	0 07 032		Height of sensor above marine deck platform (set to missing to cancel the previous value)	m, 2
			Cloud data	
	3 02 004	0 20 010	Cloud cover (total) **N**	%, 0
		0 08 002	Vertical significance	Code table, 0
		0 20 011	Cloud amount (of low or middle clouds) $\mathbf{N_h}$	Code table, 0
		0 20 013	Height of base of cloud **h**	m, –1
		0 20 012	Cloud type (low clouds) $\mathbf{C_L}$	Code table, 0
		0 20 012	Cloud type (middle clouds) $\mathbf{C_M}$	Code table, 0
		0 20 012	Cloud type (high clouds) $\mathbf{C_H}$	Code table, 0
	1 01 000		Delayed replication of 1 descriptor	
	0 31 001		Delayed descriptor replication factor	Numeric, 0
	3 02 005	0 08 002	Vertical significance	Code table, 0
		0 20 011	Cloud amount $\mathbf{N_s}$	Code table, 0
		0 20 012	Cloud type **C**	Code table, 0
		0 20 013	Height of base of cloud $\mathbf{h_sh_s}$	m, -1
0 08 002			Vertical significance (set to missing to cancel the previous value)	Code table, 0
			Icing and ice	
3 02 055	0 20 031		Ice deposit (thickness) $\mathbf{E_sE_s}$	m, 2
	0 20 032		Rate of ice accretion $\mathbf{R_s}$	Code table, 0
	0 20 033		Cause of ice accretion $\mathbf{I_s}$	Flag table, 0
	0 20 034		Sea ice concentration $\mathbf{c_i}$	Code table, 0
	0 20 035		Amount and type of ice $\mathbf{b_i}$	Code table, 0
	0 20 036		Ice situation $\mathbf{z_i}$	Code table, 0
	0 20 037		Ice development $\mathbf{S_i}$	Code table, 0
	0 20 038		Bearing of ice edge $\mathbf{D_i}$	Degree true, 0
3 02 057			**SHIP marine data**	
	3 02 056		Sea surface temperature, method of measurement, and depth below sea surface	
		0 02 038	Method of sea/water temperature measurement	Code table, 0
		0 07 063	Depth below sea/water surface (for sea surface temperature measurement)	m, 2

		0 22 043	Sea/water temperature **$s_sT_wT_wT_w$**	K, 2
		0 07 063	Depth below sea/water surface (set to missing to cancel the previous value)	m, 2
			Waves	
	3 02 021	0 22 001	Direction of waves	Degree true
		0 22 011	Period of waves **$P_{wa}P_{wa}$**	s, 0
		0 22 021	Height of waves **$H_{wa}H_{wa}$**	m, 1
	3 02 024	0 22 002	Direction of wind waves	Degree true, 0
		0 22 012	Period of wind waves **P_wP_w**	s, 0
		0 22 022	Height of wind waves **H_wH_w**	m, 1
		1 01 002	Replicate 1 descriptor 2 times	
		3 02 023	Swell waves (2 systems of swell) **$d_{w1}d_{w1}$, $P_{w1}P_{w1}$, $H_{w1}H_{w1}$, $d_{w2}d_{w2}$, $P_{w2}P_{w2}$, $H_{w2}H_{w2}$**	
3 02 060			**SHIP“period” data**	
			Present and past weather	
	3 02 038	0 20 003	Present weather **ww**	Code table, 0
		0 04 024	Time period in hours	Hour, 0
		0 20 004	Past weather (1) **W_1**	Code table, 0
		0 20 005	Past weather (2) **W_2**	Code table, 0
			Precipitation measurement	
	3 02 040	0 07 032	Height of sensor above marine deck platform (for precipitation measurement)	m, 2
		1 02 002	Replicate next 2 descriptors 2 times	
		0 04 024	Time period in hours **t_R**	Hour, 0
		0 13 011	Total precipitation / total water equivalent of snow **RRR**	kg m^{-2}, 1
			Extreme temperature data	
	3 02 058	0 07 032	Height of sensor above marine deck platform (for temperature measurement)	m, 2
		0 07 033	Height of sensor above water surface (for temperature measurement)	m, 1
		0 04 024	Time period or displacement	Hour, 0
		0 04 024	Time period or displacement (see Notes 1 and 2)	Hour, 0
		0 12 111	Maximum temperature (scale 2) at height and over period specified **$s_nT_xT_xT_x$**	K, 2
		0 04 024	Time period or displacement	Hour, 0
		0 04 024	Time period or displacement (see Note 2)	Hour, 0
		0 12 112	Minimum temperature (scale 2) at height and over period specified **$s_nT_nT_nT_n$**	K, 2
			Wind data	
	3 02 059	0 07 032	Height of sensor above marine deck platform (for wind measurement)	m, 2
		0 07 033	Height of sensor above water surface (for wind measurement)	m, 1
		0 02 002	Type of instrumentation for wind measurement **i_w**	Flag table, 0
		0 08 021	Time significance (= 2 (time averaged))	Code table, 0
		0 04 025	Time period (= - 10 minutes, or number of minutes after a significant change of wind)	Minute, 0
		0 11 001	Wind direction **dd**	Degree true, 0
		0 11 002	Wind speed **ff**	m s^{-1}, 1
		0 08 021	Time significance (= missing value)	Code table, 0
		1 03 002	Replicate next 3 descriptors 2 times	
		0 04 025	Time period in minutes	Minute, 0
		0 11 043	Maximum wind gust direction	Degree true, 0
		0 11 041	Maximum wind gust speed 910**f_mf_m**, 911**f_xf_x**	m s^{-1}, 1

Notes:

1) Within RA-IV, the maximum temperature at 1200 UTC is reported for the previous calendar day (i.e. the

ending time of the period is not equal to the nominal time of the report). To construct the required time range, descriptor 004024 has to be included two times. If the period ends at the nominal time of the report, value of the second 004024 shall be set to 0.

2) Within RA-III, the maximum day-time temperature and the minimum night-time temperature is reported (i.e. the ending time of the period may not be equal to the nominal time of the report). To construct the required time range, descriptor 004024 has to be included two times. If the period ends at the nominal time of the report, value of the second 004024 shall be set to 0.

3) 0 01 012: Means course made good (average course over the ground) during the three hours preceding the time of observation.

4) 0 01 013: Means speed made good (average speed over the ground) during the three hours preceding the time of observation.

5) If "plain language" text is reported within Section 2, this information can be conveyed in BUFR via the use of an appropriate 205YYY field as an extra descriptor following the above basic template.

Regulations:

B/C 10.1 Section 1 of BUFR or CREX

B/C 10.2 Ship identification, movement, date/time, horizontal and vertical coordinates

B/C 10.3 Pressure data

B/C 10.4 SHIP "instantaneous" data

B/C 10.4.1 Temperature and humidity data

B/C 10.4.2 Visibility data

B/C 10.4.3 Precipitation past 24 hours

B/C 10.4.4 Cloud data

B/C 10.4.5 Individual cloud layers or masses

B/C 10.5 Icing and ice

B/C 10.6 SHIP marine data

B/C 10.7 Instantaneous" data required by regional or national reporting practices

B/C 10.8 SHIP "period" data

B/C 10.8.1 Present and past weather

B/C 10.8.2 Precipitation measurement

B/C 10.8.3 Extreme temperature data

B/C 10.8.4 Wind data

B/C 10.9 "Period" data required by regional or national reporting practices

B/C 10.1 Section 1 of BUFR or CREX

B/C 10.1.1 Entries required in Section 1 of BUFR

The following entries shall be included in BUFR Section 1:

-BUFR master table,

-identification of originating/generating centre,

-identification of originating/generating sub-centre,

-update sequence number,

-identification of inclusion of optional section,

-data category (= 001 for SHIP data),

-international data sub-category [(1), (2)],

-local data subcategory,

-version number of master table,

-version number of local tables,
-year (year of the century up to BUFR edition 3),
-month (standard time),
-day (standard time = YY in the abbreviated telecommunication header for SHIP data),
-hour (standard time = GG in the abbreviated telecommunication header for SHIP data),
-minute (standard time = 00 for SHIP data).

Notes:
(1) Inclusion of this entry is required starting with BUFR edition 4.
(2) If required, the international data sub-category shall be included for SHIP data as 000 at all observation times 00, 01, 02, ..., 23 UTC.

B/C 10.1.2 Entries required in Section 1 of CREX

The following entries shall be included in CREX Section 1:
-CREX master table,
-CREX edition number,
-CREX table version number,
-version number of BUFR master table (1),
-version number of local tables (1),
-data category (= 001 for SHIP data),
-international data sub-category (1), (2),
-identification of originating/generating centre (1),
-identification of originating/generating sub-centre (1),
-update sequence number (1),
-number of subsets (1),
-year (standard time) (1),
-month (standard time) (1),
-day (standard time = YY in the abbreviated telecommunication header for SHIP data) (1),
-hour (standard time = GG in the abbreviated telecommunication header for SHIP data) (1),
-minute (standard time = 00 for SHIP data) (1).

Notes:
(1) Inclusion of these entries is required starting with CREX edition 2.
(2) If inclusion of international data sub-category is required, Note (2) under B/C 10.1.1 applies.

B/C 10.2 Ship identification, movement, date/time, horizontal and vertical coordinates <3 01 093>

B/C 10.2.1 Ship identification, movement, type of station

Ship identifier (0 01 011) shall be always reported as a non-missing value. In the absence of a suitable call sign, the word SHIP shall be used for ship identifier in reports of sea stations other then buoys, drilling rigs and oil- and gas-production platforms. [12.1.7(b)]

B/C 10.2.2 Ship movement

Direction of motion of moving observing platform (0 01 012) shall be reported in degrees true to indicate course made good (average course over the ground) during the three hours preceding the time of observation.

Speed of motion of moving observing platform (0 01 013) shall be reported in meters per second to

indicate speed made good (average speed over the ground) during the three hours preceding the time of observation.

B/C 10.2.2.1

Direction and speed of motion of moving observing platform shall always be included in reports from stations, which have observed maritime conditions, and in reports from ships being requested to include this information as a routine procedure. [12.3.1.1]

B/C 10.2.2.2

Direction and speed of motion of moving observing platform may be included as missing values in reports from a supplementary or auxiliary ship, except when reporting from an area for which the ship report collecting centre, in order to meet a requirement of a search and rescue centre, has requested inclusion of direction and speed of ship motion as a routine procedure. [12.3.1.2(b)]

B/C 10.2.3 Type of station

Type of station (0 02 001) shall be reported to indicate the type of the station operation (manned, automatic or hybrid).

Note:

(1) If a station operates as a manned station for a part of the day and as an automatic station for the rest of the day, code figure 2 (Hybrid) may be used in all reports. It is preferable, however, to use code figure 1 (Manned) in reports produced under the supervision of an observer, and a code figure 0 (Automatic) in reports produced while the station operates in the automatic mode.

B/C 10.2.4 Time of observation

Year (0 04 001), month (0 04 002), day (0 04 003), hour (0 04 004) and minute (0 04 005) of the actual time of observation shall be reported.

Note:

(1) The actual time of observation shall be the time at which the barometer is read. [12.1.8]

B/C 10.2.4.1

If the actual time of observation differs by 10 minutes or less from the standard time reported in Section 1, the standard time may be reported instead of the actual time of observation. [12.2.6]

B/C 10.2.5 Horizontal and vertical coordinates

Latitude (0 05 002) and longitude (0 06 002) of the station shall be reported in degrees with precision in hundredths of a degree.

Height of station ground above mean sea level (0 07 030) and height of barometer above mean sea level (0 07 031) shall be reported in meters with precision in tenths of a meter.

B/C 10.3 Pressure data <3 02 001>

B/C 10.3.1 Pressure at the station level

Pressure at the station level (0 10 004), i.e. at the level defined by 0 07 031 (height of barometer above mean sea level), shall be reported in pascals (with precision in tens of a pascal).

Note:

(1) Inclusion of the station pressure in reports from sea stations is left to the decision of individual Members.

B/C 10.3.2 Pressure reduced to mean sea level

Pressure reduced to mean sea level (0 10 051) shall be reported in pascals (with precision in tens of a pascal).

B/C 10.3.2.1

In reports from ships, air pressure at mean sea level shall be reported. [12.1.3.6], [12.1.3.7]

B/C 10.3.3 Three-hour pressure change and characteristic of pressure tendency

Amount of pressure change at station level, during the three hours preceding the time of observation (0 10 061), either positive, zero *or negative*, shall be reported in pascals (with precision in tens of a pascal).

B/C 10.3.3.1

Unless specified otherwise by regional decision, pressure tendency shall be included whenever the three-hourly pressure tendency is available. [12.2.3.5.1]

B/C 10.3.3.2

The characteristic of pressure tendency (Code table 0 10 063) over the past three hours shall, whenever possible, be determined on the basis of pressure samples at equi-spaced intervals not exceeding one hour. [12.2.3.5.2]

Note:

(1) Algorithms for selecting the appropriate code figure are included in publication WMO–No.8, Guide to Meteorological Instruments and Methods of Observation.

B/C 10.3.3.3

Where it is not possible to apply the algorithms specified in Regulation B/C 10.3.3.2 in reports from automatic weather stations, the characteristic of pressure tendency shall be reported as 2 when the tendency is positive, as 7 when the tendency is negative, and as 4 when the atmospheric pressure is the same as three hours before. [12.2.3.5.3]

B/C 10.4 SHIP “instantaneous” data <3 02 054>

B/C 10.4.1 Temperature and humidity data <3 02 052>

B/C 10.4.1.1 Height of sensor above marine deck platform and height of sensor above water surface

Height of sensor above marine deck platform (0 07 032) for temperature and humidity measurement shall be reported in meters (with precision in hundredths of a meter).

This datum represents the actual height of temperature and humidity sensors above marine deck platform at the point where the sensors are located.

Height of sensor above water surface (0 07 033) for temperature and humidity measurement shall be reported in meters (with precision in hundredths of a meter).

This datum represents the actual height of temperature and humidity sensors above marine water surface of sea or lake.

B/C 10.4.1.2 Dry-bulb air temperature

Dry-bulb air temperature (0 12 101) shall be reported in degrees Kelvin (with precision in hundredths of a degree Kelvin); if produced in CREX, in degrees Celsius (with precision in hundredths of a degree Celsius). Temperature data shall be reported with precision in hundredths of a degree even if they are measured with the accuracy in tenths of a degree.

Notes:

(1) This requirement is based on the fact that conversion from the Kelvin to the Celsius scale has often resulted into distortion of the data values.

(2) Temperature t (in degrees Celsius) shall be converted into temperature T (in degrees Kelvin) using equation: T = t + 273.15.

B/C 10.4.1.2.1

When the data are not available as a result of a temporary instrument failure, this quality shall be included as a missing value. [12.2.3.2]

B/C 10.4.1.3 Wet-bulb temperature and method of its measurement

Wet-bulb temperature (0 12 102) shall be reported in degrees Kelvin (with precision in hundredths of a degree Kelvin); if produced in CREX, in degrees Celsius (with precision in hundredths of a degree Celsius). Method of wet-bulb temperature measurement shall be reported by the preceding entry (Code table 0 02 039). Wet-bulb temperature data shall be reported with precision in hundredths of a degree even if they are available with the accuracy in tenths of a degree.

Note:

(1) Notes (1) and (2) under Regulation B/C 10.4.1.2 shall apply.

B/C 10.4.1.3.1

When wet-bulb temperature is used to derive dew-point value in a ship report, 0 12 102 shall be included to report the wet-bulb temperature measurement. [12.3.6]

B/C 10.4.1.4 Dew-point temperature

When available, dew-point temperature (0 12 103) shall be reported in degrees Kelvin (with precision in hundredths of a degree Kelvin); if produced in CREX, in degrees Celsius (with precision in hundredths of a degree Celsius).

Note:

(1) Notes (1) and (2) under Regulation B/C 10.4.1.2 shall apply.

B/C 10.4.1.5 Relative humidity

Relative humidity (0 13 003) shall be reported in units of a percent.

B/C 10.4.1.5.1

Both dew point temperature and relative humidity shall be reported when available.

B/C 10.4.2 Visibility data <3 02 053>

B/C 10.4.2.1 Height of sensor above marine deck platform and height of sensor above water surface

Height of sensor above marine deck platform (0 07 032) for visibility measurement shall be reported in meters (with precision in hundredths of a meter).

This datum represents the actual height of visibility sensors above marine deck platform at the point where the sensors are located. If visibility is estimated by a human observer, the average height of

observer's eyes above marine deck platform shall be reported.

Height of sensor above water surface (0 07 033) for visibility measurement shall be reported in meters (with precision in hundredths of a meter).

This datum represents the actual height of visibility sensors above the level of water surface of sea or lake. If visibility is estimated by a human observer, the average height of observer's eyes above the level of water surface of sea or lake at the time of observation shall be reported.

B/C 10.4.2.2 Horizontal visibility

Horizontal visibility (0 20 001) at surface shall be reported in meters (with precision in tens of a meter).

B/C 10.4.2.2.1

When the horizontal visibility is not the same in different directions, the shortest distance shall be given for visibility. [12.2.1.3.1]

B/C 10.4.3 Precipitation past 24 hours <3 02 034>

B/C 10.4.3.1 Height of sensor above marine deck platform

Height of sensor above marine deck platform (0 07 032) for precipitation measurement shall be reported in meters (with precision in hundredths of a meter).

This datum represents the actual height of the rain gauge rim above marine deck platform at the point where the rain gauge is located.

Note:

(1) Height of sensor above water surface (0 07 033) is not required for precipitation measurement. Therefore, there is an entry 0 07 033, directly preceding the sequence 3 02 034, that is set to a missing value to cancel the previous value.

B/C 10.4.3.2 Total amount of precipitation during the 24-hour period

Total amount of precipitation during the 24-hour period ending at the time of observation (0 13 023) shall be reported in kilograms per square meter (with precision in tenths of a kilogram per square meter). [12.4.9]

B/C 10.4.3.2.1

The precipitation over the past 24 hours shall be included (not missing) at least once a day at one appropriate time of the main standard times (0000, 0600, 1200, 1800 UTC). [12.4.1]

B/C 10.4.3.2.2

Precipitation, when it can be and has to be reported, shall be reported as 0.0 kgm^{-2} if no precipitation were observed during the referenced period. [12.2.5.4]

B/C 10.4.3.2.3

Trace shall be reported as "- 0.1 kgm^{-2} ".

B/C 10.4.4 Cloud data <3 02 004>

B/C 10.4.4.1 Total cloud cover

Total cloud cover (0 20 010) shall embrace the total fraction of the celestial dome covered by clouds irrespective of their genus. It shall be reported in *units of a percent*.

Note:

(1) Total cloud cover shall be reported as 113 when sky is obscured by fog and/or other meteorological phenomena.

B/C 10.4.4.1.1

Total cloud cover shall be reported as actually seen by the observer during the observation. [12.2.2.2.1]

B/C 10.4.4.1.2

Altocumulus perlucidus or Stratocumulus perlucidus ("mackerel sky") shall be reported *as 99% or less* (unless overlying clouds appear to cover the whole sky) since breaks are always present in this cloud form even if it extends over the whole celestial dome. [12.2.2.2.2]

B/C 10.4.4.1.3

Total cloud cover shall be reported as zero when blue sky or stars are seen through existing fog or other analogous phenomena without any trace of cloud being seen. [12.2.2.2.3]

B/C 10.4.4.1.4

When clouds are observed through fog or analogous phenomena, their amount shall be evaluated and reported as if these phenomena were non-existent. [12.2.2.2.4]

B/C 10.4.4.1.5

Total cloud cover shall not include the amount resulting from rapidly dissipating condensation trails. [12.2.2.2.5]

B/C 10.4.4.1.6

Persistent condensation trails and cloud masses, which have obviously developed from condensation trails, shall be reported as cloud. [12.2.2.2.6]

B/C 10.4.4.2 Vertical significance – Code table 0 08 002

To specify vertical significance (0 08 002) within the sequence 3 02 004, a code figure shall be selected in the following way:

(a) If low clouds are observed, then code figure 7 (Low cloud) shall be used.
(b) If there are no low clouds but middle clouds are observed, then code figure 8 (Middle clouds) shall be used.
(c) If there are no low and there are no middle clouds but high clouds are observed, then code figure 0 shall be used.
(d) If sky is obscured by fog and/or other phenomena, then code figure 5 (Ceiling) shall be used.
(e) If there are no clouds (clear sky), then code figure 62 (Value not applicable) shall be used.
(f) If the cloud cover is not discernible for reasons other than (d) above or observation is not made, then code figure 63 (Missing value) shall be used.

B/C 10.4.4.3 Cloud amount (of low or middle clouds) – Code table 0 20 011

Amount of all the low clouds (clouds of the genera Stratocumulus, Stratus, Cumulus, and Cumulonimbus) present or, if no low clouds are present, the amount of all the middle clouds (clouds of the genera Altocumulus, Altostratus, and Nimbostratus) present.

B/C 10.4.4.3.1

Cloud amount shall be reported as follows:

(a) If there are low clouds, then the total amount of all low clouds, as actually seen by the observer during the observation shall be reported for the cloud amount.
(b) If there are no low clouds but there are middle clouds, then the total amount of the middle clouds shall be reported for the cloud amount.
(c) If there are no low clouds and there are no middle clouds but there are high clouds (clouds of the genera Cirrus, Cirrocumulus, and Cirrostratus), then the cloud amount shall be reported as zero. [12.2.7.2.1]

B/C 10.4.4.3.2

Amount of Altocumulus perlucidus or Stratocumulus perlucidus ("mackerel sky") shall be reported using code figure 7 or less since breaks are always present in this cloud form even if it extends over the whole celestial dome. [12.2.7.2.2]

B/C 10.4.4.3.3

When the clouds reported for cloud amount are observed through fog or an analogous phenomenon, the cloud amount shall be reported as if these phenomena were not present. [12.2.7.2.3]

B/C 10.4.4.3.4

If the clouds reported for cloud amount include contrails, then the cloud amount shall include the amount of persistent contrails. Rapidly dissipating contrails shall not be included in the value for the cloud amount. [12.2.7.2.4]

B/C 10.4.4.4 Height of base of lowest cloud

Height above surface of the base (0 20 013) of the lowest cloud seen shall be reported in meters (with precision in tens of a meter).

Note:

(1) The term "height above surface" shall be considered as being the height above water surface of sea or lake.

B/C 10.4.4.4.1

When clouds are observed through fog or analogous phenomena but the sky is discernable, the base of the lowest cloud shall refer to the base of the lowest cloud observed, if any. When, under the above conditions, the sky is not discernible, the base of the lowest cloud shall be reported as missing. [12.2.1.2]

B/C 10.4.4.4.2

When no cloud are reported (Total cloud cover = 0) the base of the lowest cloud *shall be reported as a missing value.*

B/C 10.4.4.5 Cloud type of low, middle and high clouds - Code table 0 20 012

Clouds of the genera Stratocumulus, Stratus, Cumulus, and Cumulonimbus (low clouds) shall be reported for the first entry 0 20 012, clouds of the genera Altocumulus, Altostratus, and Nimbostratus (middle clouds) shall be reported for the second entry 0 20 012 and clouds of the genera Cirrus, Cirrocumulus, and Cirrostratus (high clouds) shall be reported for the third entry 0 20 012.

B/C 10.4.4.5.1

The reporting of type of low, middle and high clouds shall be as specified in publication WMO-NO. 407 – International Cloud Atlas, Volume I. [12.2.7.3]

B/C 10.4.5 Individual cloud layers or masses

B/C 10.4.5.1 Number of individual cloud layers or masses

The number of individual cloud layers or masses shall be indicated by Delayed descriptor replication factor 0 31 001 in BUFR and by a four-digit number in the Data Section corresponding to the position of the replication descriptor in the Data Description Section of CREX.

Note:

(1) The number of cloud layers or masses shall never be set to missing value.

(2) The number of cloud layers or masses shall be set to a positive value in a NIL report.

B/C 10.4.5.1.1

The number of individual cloud layers or masses shall in the absence of Cumulonimbus clouds not exceed three. Cumulonimbus clouds, when observed, shall always be reported, so that the total number of individual cloud layers or masses can be four. The selection of layers (or masses) to be reported

shall be made in accordance with the following criteria:

(a) The lowest individual layer (or mass) of any amount (cloud amount at least one octa or less, but not zero);

(a) The next higher individual layer (or mass) the amount of which is greater than two octas;

(b) The next higher individual layer (or mass) the amount of which is greater than four octas;

(c) Cumulonimbus clouds, whenever observed and not reported under (a), (b) and (c) above. [12.4.10.1]

B/C 10.4.5.1.2

When the sky is clear, the number of individual cloud layers or masses shall be set to zero.

B/C 10.4.5.1.3

The order of reporting the individual cloud layers or masses shall always be from lower to higher levels. [12.4.10.2]

B/C 10.4.5.2 Individual cloud layer or mass <3 02 005>

Each cloud layer or mass shall be represented by the following four parameters: Vertical significance (0 08 002), amount of individual cloud layer or mass (0 20 011), type of cloud layer or mass (0 20 012) and height of base of individual cloud layer or mass (0 20 013).

B/C 10.4.5.2.1 Vertical significance – Code table 0 08 002

To specify vertical significance (0 08 002) within the sequence 3 02 005, a code figure shall be selected in the following way:

(a) Code figure 1 shall be used in the first non-Cumulonimbus layer.

(b) Code figure 2 shall be used in the second non-Cumulonimbus layer.

(c) Code figure 3 shall be used in the third non-Cumulonimbus layer.

(d) Code figure 4 shall be used in any Cumulonimbus layer.

(e) If sky is obscured by fog and/or other phenomena, then code figure 5 (Ceiling) shall be used.

(f) If the cloud cover is not discernible for reasons other than (e) above or observation is not made, then code figure 63 (Missing value) shall be used.

B/C 10.4.5.2.2 Cloud amount, type and height of base

B/C 10.4.5.2.2.1

When the sky is clear, in accordance with Regulation B/C 10.4.5.1.2 cloud amount, genus, and height shall not be included. [12.4.10.4]

B/C 10.4.5.2.2.2

In determining cloud amounts (Code table 0 20 011) to be reported for individual layers or masses, the observer shall estimate, by taking into consideration the evolution of the sky, the cloud amounts of each individual layer or mass at the different levels, as if no other clouds existed. [12.4.10.3]

B/C 10.4.5.2.2.3

Type of a cloud layer or mass (Code table 0 20 012) shall be reported using code figures 0, 1, 2, 3, 4, 5, 6, 7, 8, 9, 59 and 63.

B/C 10.4.5.2.2.4

If, notwithstanding the existence of fog or other obscuring phenomena, the sky is discernible, the partially obscuring phenomena shall be disregarded. If, under the above conditions, the sky is not discernible, the cloud type shall be reported using *code figure 59* and the cloud height shall be replaced by vertical visibility. [12.4.10.5]

Note:

(1) The vertical visibility is defined as the vertical visual range into an obscuring medium.

B/C 10.4.5.2.2.5

If two or more types of cloud occur with their bases at the same level and this level is one to be reported in accordance with Regulation B/C 10.4.5.1.1, the selection for cloud type and amount shall be made with the following criteria:

(a) If these types do not include Cumulonimbus then cloud genus shall refer to the cloud type that represents the greatest amount, or if there are two or more types of cloud all having the same amount, the highest applicable code figure for cloud genus shall be reported. Cloud amount shall refer to the total amount of cloud whose bases are all at the same level;

(b) If these types do include Cumulonimbus then one layer shall be reported to describe only this type with cloud genus indicated as Cumulonimbus and the cloud amount as the amount of the Cumulonimbus. If the total amount of the remaining type(s) of cloud (excluding Cumulonimbus) whose bases are all at the same level is greater than that required by Regulation B/C 10.4.5.1.1, then another layer shall be reported with type being selected in accordance with (a) and amount referring to the total amount of the remaining cloud (excluding Cumulonimbus). [12.4.10.6]

B/C 10.4.5.2.2.6

Regulations B/C 10.4.4.1.3 to B/C 10.4.4.1.6, inclusive, shall apply. [12.4.10.7]

B/C 10.4.5.2.2.7

Height above surface of the cloud base (0 20 013) shall be reported in meters (with precision in tens of a meter).

Note:

(1) The term “height above surface” shall be considered as being the height above water surface of sea or lake.

B/C 10.5 Icing and ice <3 02 055>

B/C 10.5.1 Icing

Thickness of ice deposit (0 20 031) shall be reported in meters (with precision in hundredths of a meter).

Rate of ice accretion (0 20 032) shall be reported using corresponding Code table.

Cause of ice accretion (0 20 033) shall be reported using corresponding Flag table.

B/C 10.5.1.1

When the ice accretion on ships is reported in plain language, this information shall be conveyed in BUFR/CREX via the use of an appropriate 205YYY field as an extra descriptor following the basic template.

B/C 10.5.1.2

When the ice accretion on ships is reported in plain language, it shall be preceded by the word ICING. [12.3.5]

B/C 10.5.2 Ice

Sea ice concentration (0 20 034) shall be reported using corresponding Code table.

Amount and type of ice (0 20 035) shall be reported using corresponding Code table.

Ice situation (0 20 036) shall be reported using corresponding Code table.

Ice development (0 20 037) shall be reported using corresponding Code table.

Bearing of ice edge (0 20 038) shall be reported in degrees true.

B/C 10.5.2.1

The reporting of sea ice and ice of land origin using the sequence <0 20 034, 0 20 035, 0 20 036, 0 20 037, 0 20 038> shall not supersede the reporting of sea ice and icebergs in accordance with the International Convention for the Safety of Life at Sea. [12.3.7.1]

B/C 10.5.2.2

The sequence <0 20 034, 0 20 035, 0 20 036, 0 20 037, 0 20 038> shall be reported whenever sea ice and/or ice of land origin are observed from the ship's position at the time of observation, unless the ship is required to report ice conditions by means of a special sea-ice code. [12.3.7.2]

B/C 10.5.2.3

When an ice edge is crossed or sighted between observational hours, it shall be reported as a plain-language addition in the form "ice edge lat. long." (with position in degrees and minutes). This information shall be conveyed in BUFR/CREX via the use of an appropriate 205YYY field as an extra descriptor following the basic template. [12.3.7.3]

B/C 10.5.2.4

If the ship is in the open sea reporting an ice edge, the sea ice concentration (0 20 034) and ice development (0 20 037) shall be reported only if the ship is close to the ice (i.e. within 0.5 nautical mile). [12.3.7.4]

B/C 10.5.2.5

If the ship is in an open lead more than 1.0 nautical mile wide, sea ice concentration (0 20 034) shall be set to 1 and bearing of ice edge (0 20 038) to 0. If the ship is in fast ice with ice boundary beyond limit of visibility, sea ice concentration (0 20 034) shall be set to 1 and bearing of ice edge (0 20 038) to missing. [12.3.7.5]

B/C 10.5.2.6

If no sea ice is visible and the sequence <0 20 034, 0 20 035, 0 20 036, 0 20 037, 0 20 038> is used to report ice of land origin only, 0 20 035 shall be used to report the amount of ice of land origin, and 0 20 034 and 0 20 036 shall be set to 0, and 0 20 037 and 0 20 038 shall be set to missing; e.g. <0,2,0, missing, missing> would mean 6-10 icebergs in sight, but no sea ice. [12.3.7.6]

B/C 10.5.2.7

In coding concentration or arrangement of sea ice (0 20 034) that condition shall be reported which is of the most navigational significance. [12.3.7.7]

B/C 10.5.2.8

The bearing of the principal ice edge reported shall be to the closest part of that edge. [12.3.7.8]

B/C 10.5.2.9

The requirements for sea-ice reporting are covered in the following way by the associated parameters:

Sea ice concentration - Code table 0 20 034

(a) The purpose of the code figure 0 in code table 0 20 034 is to establish in relation to code figure 0 in code table 0 20 036 and code table 0 20 035 whether the floating ice that is visible is only ice of land origin;

(b) The possible variation in sea-ice concentration and arrangement within an area of observation are almost infinite. However, the field of reasonably accurate observation from a ship's bridge is limited. For this reason, and also because minor variations are of temporary significance, the

choice of concentrations and arrangements has been restricted for reporting purposes to those representing significantly different conditions from a navigational point of view. The code figures 2-9 have been divided into two sections depending on:

(i) Whether sea-ice concentration within the area of observation is more or less uniform (code figures 2-5); or

(ii) Whether there are marked contrasts in concentration or arrangement (code figures 6-9).

Amount and type of ice - Code table 0 20 035

(a) This code provides a scale of increasing navigational hazard;

(b) Growlers and bergy bits, being much smaller and lower in the water than icebergs, are more difficult to see either by eye or radar. This is especially so if there is heavy sea running. For this reason, code figures 4 and 5 represent more hazardous conditions than code figures 1 to 3.

Ice situation - Code table 0 20 036

(a) The purpose of this parameter is to establish:

(i) Whether the ship is in pack ice or is viewing floating ice (i.e. sea ice and/or ice of land origin) from the open sea; and

(ii) A qualitative estimate, dependent on the sea-ice navigation capabilities of the reporting ship, of the penetrability of the sea ice and of the recent trend in conditions;

(b) The reporting of the conditions represented by code figures 1-9 in Code table 0 20 036 can be used to help in the interpretation of reports from the two code tables (ice concentration 0 20 034 and ice development 0 20 037).

Ice development - Code table 0 20 037

(a) This code table represents a series of increasing navigational difficulties for any given concentration; i.e. if the concentration is, for example, 8/10ths, then new ice would hardly have any effect on navigation while predominantly old ice would provide difficult conditions requiring reductions in speed and frequent course alternations;

(b) The correlation between the stage of development of sea ice and its thickness is explained in publication WMO-No.8 – Guide to Meteorological Instruments and Methods of Observation.

Bearing of ice edge – 0 20 038

There is no provision in this code for the reporting of distance from the ice edge. It will be assumed by those receiving the report that the bearing has been given to the closest part of the ice edge. From the reported code figures for ice concentration 0 20 034 and ice development 0 20 037, it will be clear whether the ship is in ice or within 0.5 nautical mile of the ice edge. If the ship is in open water and more than 0.5 nautical mile from the ice edge, the ice edge will be assumed to be aligned at right angles to the bearing which is reported.

B/C 10.6 SHIP marine data <3 02 057>

B/C 10.6.1 Sea surface temperature, method of its measurement and depth below sea/water surface <3 02 056>

Method of sea/water temperature measurement shall be reported by Code table 0 02 038; depth bellow sea/water surface (0 07 063) shall be reported in meters (with precision in hundredths of a meter). Sea/water temperature (0 22 043) shall be reported in degrees Kelvin (with precision in hundredths of a

degree Kelvin); if produced in CREX, in degrees Celsius (with precision in hundredths of a degree Celsius). Sea/water temperature data shall be reported with precision in hundredths of a degree even if they are available with the accuracy in tenths of a degree.

Note:

(1) Notes (1) and (2) under Regulation B/C 10.4.1.2 shall apply.

B/C 10.6.1.1

Sea/water temperature shall always be included in reports from ocean weather stations, when data are available. [12.3.2]

B/C 10.6.2 Instrumental wave data <3 02 021>

Direction of waves (0 22 001) shall be used to reported true direction (direction from which the waves are coming) in degrees true.

Period of waves (0 22 011) shall be reported in seconds.

Height of waves (0 22 021) shall be reported in meters with precision in tenths of a meter.

Note:

(1) Height of waves shall be reported with precision in tenths of a meter even if the data are available with lower accuracy and reported in TAC in units of 0.5 meter. [12.3.3.2]

B/C 10.6.2.1

These data shall always be included in reports from ocean weather stations, when data are available. [12.3.3.1]

B /C 10.6.2.2

The sequence 3 02 021 shall be used to report instrumental wave data. [12.3.3.2]

B/C 10.6.2.3

When the sea is calm (no waves and no swell) direction of waves, period of waves and height of waves shall be reported as 0. [12.3.3.4(a)] [12.3.3.5(a)]

B/C 10.6.2.4

If instrumental wave data are not available for direction, period or height of waves, as the case may be, 0 22 001, 0 22 011 or 0 22 021shall be set to missing. [12.3.3.4(c)]

B/C 10.6.3 Wind waves and swell waves <3 02 024>

Direction of wind waves (0 22 002) shall be used to reported true direction (direction from which the waves are coming) in degrees true.

Period of wind waves (0 22 012) shall be reported in seconds.

Height of wind waves (0 22 022) shall be reported in meters with precision in tenths of a meter.

Direction of swell waves (0 22 003) shall be used to reported true direction (direction from which the waves are coming) in degrees true.

Period of swell waves (0 22 013) shall be reported in seconds.

Height of swell waves (0 22 023) shall be reported in meters with precision in tenths of a meter.

B/C 10.6.3.1

Wind wave data and swell wave data shall always be included in reports from ocean weather stations, when data are available. [12.3.3.1] [12.3.4.4]

B /C 10.6.3.2

The sequence <0 22 002, 0 22 012, 0 22 022> shall be used to report wind waves, when instrumental wave data are not available. [12.3.3.3]

B/C 10.6.3.3

When the sea is calm (no waves and no swell) direction, period and height of wind waves shall be reported as 0. [12.3.3.4(a)]

B/C 10.6.3.4

If wind wave data are not available (owing to confused sea or for any other reason) for direction, period

or height of wind waves, as the case may be, 0 22 002, 0 22 012 or 0 22 022 shall be set to missing. [12.3.3.4(b), (d)]

B/C 10.6.3.5

Swell wave data shall be reported only when swell waves can be distinguished from wind waves. [12.3.4.1]

B/C 10.6.3.6

When the sea is calm (no waves and no swell) direction, period and height of swell waves shall be reported as 0.

B/C 10.6.3.7

If swell waves cannot be distinguished from wind waves, direction 0 22 003, period 0 22 013 and height 0 22 023 of swell waves shall be set to missing.

B/C 10.6.3.8

If only one system of swell is observed, direction, period and height of swell waves shall be reported in the first replication of <3 02 023> = <0 22 003, 0 22 013, 0 22 023>. All elements in the second replication of <3 02 023> shall be set to missing. [12.3.4.2]

B/C 10.6.3.9

If a second system of swell is observed, its direction, period and height shall be reported in the second replication of <3 02 023> = <0 22 003, 0 22 013, 0 22 023>. The corresponding data for the first system of swell shall be reported as prescribed by Regulation B/C 10.6.3.8. [12.3.4.3]

B/C 10.7 “Instantaneous” data required by regional or national reporting practices

If regional or national reporting practices require inclusion of additional “instantaneous” parameters, the sequence descriptor 3 08 009 shall not be used. In this case BUFR/CREX template for SHIP data shall be used in its first level expanded form and the descriptors, corresponding to the required “instantaneous” parameters, shall be inserted to precede 3 02 060 (SHIP “period” data).

Notes:

(1) “Instantaneous” parameter is a parameter that is not coupled to a time period descriptor, e.g. 0 04 024, 0 04 025.

(2) No regional requirements are currently indicated for reporting SHIP data from sea stations in the *Manual on Codes*, WMO-No. 306, Volume II.

B/C 10.8 SHIP “period” data <3 02 060>

B/C 10.8.1 Present and past weather <3 02 038>

B/C 10.8.1.1

Present weather (Code table 0 20 003) and past weather (1) (Code table 0 20 004) and past weather (2) (Code table 0 20 005) shall be reported as non-missing values if present and past conditions are known. In case of a report from a manually operated station after a period of closure or at start up, when past weather conditions for the period applicable to the report are unknown, past weather (1) and past weather (2) reported as missing shall indicate that previous conditions are unknown. This regulation shall also apply to automatic reporting stations with the facility to report present and past weather. [12.2.6.1]

B/C 10.8.1.2

Code figures 0, 1, 2, 3, 100, 101, 102 and 103 for present weather and code figures 0, 1, 2 and 10 for past weather (1) and past weather (2) shall be considered to represent phenomena without significance. [12.2.6.2]

B/C 10.8.1.3

Present and past weather shall be *reported if observation was made (data available), regardless significance of the phenomena.*

Note:

(1) If data are produced and collected in traditional codes and present weather and past weather is omitted in a SHIP report (no significant phenomena observed), code figure 508 shall be used for present weather and code figure 10 for past weather (1) and past weather (2) when converted into BUFR or CREX.

B/C 10.8.1.4

If no observation was made (data not available), code figure 509 shall be used for present weather and both past weather (1) and past weather (2) shall be reported as missing.

B/C 10.8.1.5 Present weather from a manned weather station

B/C 10.8.1.5.1

If more than one form of weather is observed, the highest applicable code figure from the range <00 to 99> shall be selected for present weather. Code figure 17 shall have precedence over code figures 20 – 49. Other weather may be reported using additional entries 0 20 003 or 0 20 021 to 0 20 026 applying Regulation B/C 10.7. [12.2.6.4.1]

B/C 10.8.1.5.2

In coding 01, 02, or 03, there is no limitation on the magnitude of the change of the cloud amount. Code figures 00, 01, and 02 can each be used when the sky is clear at the time of observation. In this case, the following interpretation of the specifications shall apply:

- 00 is used when the preceding conditions are not known,
- 01 is used when the clouds have dissolved during the past hour,
- 02 is used when the sky has been continuously clear during the past hour. [12.2.6.4.2]

B/C 10.8.1.5.3

When the phenomenon is not predominantly water droplets, the appropriate code figure shall be selected without regard to visibility. [12.2.6.4.3]

B/C 10.8.1.5.4

The code figure 05 shall be used when the obstruction to vision consists predominantly of lithometeors. [12.2.6.4.4]

B/C 10.8.1.5.5

National instructions shall be used to indicate the specifications for code figures 07 and 09. [12.2.6.4.5]

B/C 10.8.1.5.6

The visibility restrictions on code figure 10 shall be 1000 meters or more. The specification refers only to water droplets and ice crystals. [12.2.6.4.6]

B/C 10.8.1.5.7

For code figures 11 or 12 to be reported, the apparent visibility shall be less than 1000 meters. [12.2.6.4.7]

B/C 10.8.1.5.8

For code figure 18, the following criteria for reporting squalls shall be used:

(a) When wind speed is measured: A sudden increase of wind speed of at least eight meters per second, the speed rising to 11 meters per second or more and lasting for at least one minute;

(b) When the Beaufort scale is used for estimating wind speed: A sudden increase of wind speed by at least three stages of the Beaufort scale, the speed rising to force 6 or more and lasting for at least one minute. [12.2.6.4.8]

B/C 10.8.1.5.9

Code figures 20 – 29 shall never be used when precipitation is observed at the time of observation. [12.2.6.4.9]

B/C 10.8.1.5.10

For code figure 28, visibility shall have been less than 1000 meters.

Note:

(1) The specification refers only to visibility restrictions which occurred as a result of water droplets or ice crystals. [12.2.6.4.10]

B/C 10.8.1.5.11

For synoptic coding purposes, a thunderstorm shall be regarded as being at the station from the time thunder is first heard, whether or not lightning is seen or precipitation is occurring at the station. A thunderstorm shall be reported if thunder is heard within the normal observational period preceding the time of the report. A thunderstorm shall be regarded as having ceased at the time thunder is first heard and the cessation is confirmed if thunder is not heard for 10 – 15 minutes after this time. [12.2.6.4.11]

B/C 10.8.1.5.12

The necessary uniformity in reporting code figures 36, 37, 38, and 39, which may be desirable within certain regions, shall be obtained by means of national instructions. [12.2.6.4.12]

B/C 10.8.1.5.13

A visibility restriction "less than 1000 meters" shall be applied to code figures 42 – 49. In the case of code figures 40 or 41, the apparent visibility in the fog or ice fog patch or bank shall be less than 1000 meters. Code figures 40 – 47 shall be used when the obstructions to vision consist predominantly of water droplets or ice crystals, and 48 or 49 when the obstructions consist predominantly of water droplets. [12.2.6.4.13]

B/C 10.8.1.5.14

When referring to precipitation, the phrase "at the station" in the code table shall mean "at the point where the observation is normally taken". [12.2.6.4.14]

B/C 10.8.1.5.15

The precipitation shall be encoded as intermittent if it has been discontinuous during the preceding hour, without presenting the character of a shower. [12.2.6.4.15]

B/C 10.8.1.5.16

The intensity of precipitation shall be determined by the intensity at the time of the observation. [12.2.6.4.16]

B/C 10.8.1.5.17

Code figures 80 – 89 shall be used only when the precipitation is of the shower type and takes place at the time of the observation.

Note:

(1) Showers are produced by convective clouds. They are characterized by their abrupt beginning and end and by the generally rapid and sometimes great variations in the intensity of the precipitation. Drops and solid particles falling in a shower are generally larger than those falling in non-showery precipitation. Between showers openings may be observed unless stratiform clouds fill the intervals between the cumuliform clouds. [12.2.6.4.17]

B/C 10.8.1.5.18

In reporting code figure 98, the observer shall be allowed considerable latitude in determining whether precipitation is or is not occurring, if it is not actually visible. [12.2.6.4.18]

B/C 10.8.1.6 Present weather from an automatic weather station

B/C 10.8.1.6.1

The highest applicable code figure shall be selected. [12.2.6.5.1]

B/C 10.8.1.6.2

In coding code figures 101, 102, and 103, there is no limitation on the magnitude of the change of the cloud amount. Code figures 100, 101, and 102 can each be used when the sky is clear at the time of observation. In this case, the following interpretation of the specifications shall apply:

- Code figure 100 is used when the preceding conditions are not known;
- Code figure 101 is used when the clouds have dissolved during the past hour;
- Code figure 102 is used when the sky has been continuously clear during the past hour. [12.2.6.5.2]

B/C 10.8.1.6.3

When the phenomenon is not predominantly water droplets, the appropriate code figure shall be selected without regard to the visibility. [12.2.6.5.3]

B/C 10.8.1.6.4

The code figures 104 and 105 shall be used when the obstruction to vision consists predominantly of lithometeors. [12.2.6.5.4]

B/C 10.8.1.6.5

The visibility restriction on code figure 110 shall be 1000 meters or more. The specification refers only to water droplets and ice crystals. [12.2.6.5.5]

B/C 10.8.1.6.6

For code figure 118, the following criteria for reporting squalls shall be used:

A sudden increase of wind speed of at least eight meters per second, the speed rising to 11 meters per second or more and lasting for at least one minute. [12.2.6.5.6]

B/C 10.8.1.6.7

Code figures 120 – 126 shall never be used when precipitation is observed at the time of observation. [12.2.6.5.7]

B/C 10.8.1.6.8

For code figure 120, visibility shall have been less than 1000 meters.

Note: The specification refers only to visibility restrictions, which occurred as a result of water droplets or ice crystals. [12.2.6.5.8]

B/C 10.8.1.6.9

For synoptic coding purposes, a thunderstorm shall be regarded as being at the station from the time thunder is first detected, whether or not lightning is detected or precipitation is occurring at the station. A thunderstorm shall be reported in present weather if thunder is detected within the normal observational period preceding the time of the report. A thunderstorm shall be regarded as having ceased at the time thunder is last detected and the cessation is confirmed if thunder is not detected for 10 – 15 minutes after this time. [12.2.6.5.9]

B/C 10.8.1.6.10

A visibility restriction “less than 1000 meters” shall be applied to code figures 130 – 135. [12.2.6.5.10]

B/C 10.8.1.6.11

The precipitation shall be encoded as intermittent if it has been discontinuous during the preceding hour, without presenting the character of a shower. [12.2.6.5.11]

B/C 10.8.1.6.12

The intensity of precipitation shall be determined by the intensity at the time of observation. [12.2.6.5.12]

B/C 10.8.1.6.13

Code figures 180 – 189 shall be used only when the precipitation is intermittent or of the shower type and takes place at the time of observation.

Note:

(1) Showers are produced by convective clouds. They are characterized by their abrupt beginning and end and by the generally rapid and sometimes great variations in the intensity of the precipitation. Drops and solid particles falling in a shower are generally larger than those falling in non-showery precipitation. Between showers openings may be observed unless stratiform clouds fill the intervals between the cumuliform clouds. [12.2.6.5.13]

B/C 10.8.1.7 Past weather reported from a manned weather station

B/C 10.8.1.7.1 Time period

The time period (0 04 024) covered by past weather (1) and past weather (2) shall be expressed as *a negative value* in hours:

(a) Six hours, for observations at 0000, 0600, 1200, and 1800 UTC;
(b) Three hours for observations at 0300, 0900, 1500, and 2100 UTC;
(c) Two hours for intermediate observations if taken every two hours.
(d) *One hour* for intermediate observations if taken every hour. [12.2.6.6.1]

B/C 10.8.1.7.2

The code figures for past weather (1) and past weather (2) shall be selected in such a way that past and present weather together give as complete a description as possible of the weather in the time interval concerned. For example, if the type of weather undergoes a complete change during the time interval concerned, the code figures selected for past weather (1) and past weather (2) shall describe the weather prevailing before the type of weather indicated by present weather began. [12.2.6.6.2]

B/C 10.8.1.7.3

When the past weather (1) and past weather (2) are used in hourly reports, Regulation B/C 10.8.1.7.1 (d) shall apply. [12.2.6.6.3]

B/C 10.8.1.7.4

If, using Regulation B/C 10.8.1.7.2, more than one code figure may be given to past weather (1), the highest figure shall be reported for past weather (1) and the second highest code figure shall be reported for past weather (2). [12.2.6.6.4]

B/C 10.8.1.7.5

If the weather during the period has not changed so that only one code figure may be selected for past weather, then that code figure shall be reported for both past weather (1) and past weather (2). [12.2.6.6.5]

B/C 10.8.1.8 Past weather reported from an automatic weather station

B/C 10.8.1.8.1 Time period

The time period (0 04 024) covered by past weather (1) and past weather (2) shall be expressed as *a negative value* in hours:

(a) Six hours for observations at 0000, 0600, 1200, and 1800 UTC;
(b) Three hours for observations at 0300, 0900, 1500, and 2100 UTC;

(c) Two hours for intermediate observations if taken every two hours.

(d) *One hour* for intermediate observations if taken every hour. [12.2.6.7.1]

B/C 10.8.1.8.2

The code figures for past weather (1) and past weather (2) shall be selected so that the maximum capability of the automatic station to discern past weather is utilized, and so that past and present weather together give as complete a description as possible of the weather in the time interval concerned. [12.2.6.7.2]

B/C 10.8.1.8.3

In cases where the automatic station is capable only of discerning very basic weather conditions, the lower code figures representing basic and generic phenomena may be used. If the automatic station has higher discrimination capabilities, the higher code figures representing more detailed explanation of the phenomena shall be used. For each basic type of phenomenon, the highest code figure within the discrimination capability of the automatic station shall be reported. [12.2.6.7.3]

B/C 10.8.1.8.4

If the type of weather during the time interval concerned undergoes complete and discernible changes, the code figures selected for past weather (1) and past weather (2) shall describe the weather prevailing before the type of weather indicated by present weather began. The highest figure shall be reported for past weather (1) and the second highest code figure shall be reported for past weather (2). [12.2.6.7.4]

B/C 10.8.1.8.5

If a discernible change in weather has not occurred during the period, so that only one code figure may be selected for the past weather, then that code figure shall be reported for both past weather (1) and past weather (2). For example, rain during the entire period shall be reported as code figure 14 for both past weather (1) and past weather (2) in the case of an automatic station incapable of differentiating types of precipitation, or code figure 16 for both past weather (1) and past weather (2) in the case of a station with the higher discrimination capability. [12.2.6.7.5]

B/C 10.8.2 Precipitation measurement <3 02 040>

B/C 10.8.2.1 Height of sensor above marine deck platform

Height of sensor above marine deck platform (0 07 032) for precipitation measurement shall be reported in meters (with precision in hundredths of a meter).

This datum represents the actual height of the rain gauge rim above marine deck platform at the point where the rain gauge is located.

B/C 10.8.2.2 Period of reference for amount precipitation

Time period (0 04 024) for amount of precipitation shall be reported as *a negative value* in hours. It shall be determined

(a) by regional decision (e.g. -6, -12, -24) in the first replication,

(b) by national decision (e.g. -1, -3) in the second replication.

B/C 10.8.2.3 Total amount of precipitation

Total amount of precipitation, which has fallen during the period of reference for amount of precipitation, shall be reported in kilograms per square meter (with precision in tenths of a kilogram per square meter).

B/C 10.8.2.3.1

Precipitation, when it can be and has to be reported, shall be reported as 0.0 kgm^{-2} if no precipitation were observed during the referenced period. [12.2.5.4]

B/C 10.8.2.3.2

Trace shall be reported as "- 0.1 kgm^{-2} ".

B/C 10.8.3 Extreme temperature data <3 02 058>

B/C 10.8.3.1 Height of sensor above marine deck platform and height of sensor above water surface

Height of sensor above marine deck platform (0 07 032) for temperature measurement shall be reported in meters (with precision in hundredths of a meter).

This datum represents the actual height of temperature sensors above marine deck platform at the point where the sensors are located.

Height of sensor above water surface (0 07 033) for temperature measurement shall be reported in meters (with precision in hundredths of a meter).

This datum represents the actual height of temperature sensors above marine water surface of sea or lake.

B/C 10.8.3.2 Periods of reference for extreme temperatures

Time period for maximum temperature and time period for minimum temperature (0 04 024) shall be determined by regional decision and reported as *negative values* in hours. [12.4.4]

Notes:

(1) If the period for maximum temperature or the period for minimum temperature ends at the nominal time of report, the second value of 0 04 024 shall be reported as 0.

(2) If the period for maximum temperature or the period for minimum temperature does not end at the nominal time of report, the first value of 0 04 024 shall indicate the beginning of the period of reference and the second value of 0 04 024 shall indicate the end of the period of reference. E.g. to report the maximum temperature for the previous calendar day from a station in RA IV, value of the first 0 04 024 shall be set to – 30 and value of the second 0 04 024 shall be set to – 6, provided that the nominal time of the report 12 UTC corresponds to 6 a.m. local time.

B/C 10.8.3.3 Maximum and minimum temperature

Maximum and minimum temperature shall be reported in degrees Kelvin (with precision in hundredths of a degree Kelvin); if produced in CREX, in degrees Celsius (with precision in hundredths of a degree Celsius).

Note:

(1) Notes (1) and (2) under Regulation B/C 10.4.1.2 shall apply.

B/C 10.8.4 Wind data <3 02 059>

B/C 10.8.4.1 Height of sensor above marine deck platform and height of sensor above water surface

Height of sensor above marine deck platform (0 07 032) for wind measurement shall be reported in meters (with precision in hundredths of a meter).

This datum represents the actual height of wind sensors above marine deck platform at the point where the sensors are located.

Height of sensor above water surface (0 07 033) for wind measurement shall be reported in meters (with precision in hundredths of a meter).

This datum represents the actual height of wind sensors above marine water surface of sea or lake.

B/C 10.8.4.2 Type of instrumentation for wind measurement - Flag table 0 02 002

This datum shall be used to specify whether the wind speed was measured by certified instruments (bit No. 1 set to 1) or estimated on the basis of the Beaufort wind scale (bit No. 1 set to 0), and to indicate the original units for wind speed measurement. Bit No. 2 set to 1 indicates that wind speed was originally measured in knots and bit No. 3 set to 1 indicates that wind speed was originally measured in kilometers per hour. Setting both bits No.2 and No.3 to 0 indicates that wind speed was originally measured in meters per second.

B/C 10.8.4.3 Wind direction and speed

The mean direction and speed of the wind over the 10-minute period immediately preceding the observation shall be reported. The time period (0 04 025) shall be included as -10. However, when the 10-minute period includes a discontinuity in the wind characteristics, only data obtained after the discontinuity shall be used for reporting the mean values, and hence the period (0 04 025) in these circumstances shall be correspondingly reduced. [12.2.2.3.1]

The time period is preceded by a time significance qualifier (0 08 021) that shall be set to 2 (Time averaged).

The wind direction (0 11 001) shall be reported in degrees true and the wind speed (0 11 002) shall be reported in meters per second (with precision in tenths of a meter per second).

B/C 10.8.4.3.1

In the absence of wind instruments, the wind speed shall be estimated on the basis of the Beaufort wind scale. The Beaufort number obtained by estimation is converted into meters per second by use of the relevant wind speed equivalent column on the Beaufort scale, and this speed is reported for wind speed. [12.2.2.3.2]

B/C 10.8.4.4 Maximum wind gust direction and speed

Time period for maximum wind gust direction and speed (0 04 025) shall be determined by regional or national decision and reported as a negative value in minutes.

Direction of the maximum wind gust (0 11 043) shall be reported in degrees true and speed of the maximum wind gust (0 11 041) shall be reported in meters per second (with precision in tenths of meters per second).

B/C 10.9 "Period" data required by regional or national reporting practices

If regional reporting practices in a Region require inclusion of additional "period" parameters, the corresponding "regional" common sequence (see the Annex) shall be supplemented by relevant descriptors. If national reporting practices require inclusion of additional "period" parameters, the common sequence 3 08 009 shall be supplemented by relevant descriptors.

Note:

(1) "Period" parameter is a parameter that is coupled to a time period descriptor, e.g. 0 04 024, 0 04 025.

(2) No additional "period" parameters are currently required by regional regulations for SHIP data in the *Manual on Codes*, WMO-No. 306, Volume II.

B/C20 – Regulations for reporting PILOT, PILOT SHIP and PILOT MOBIL data in TDCF

General

A BUFR (or CREX) message should be sent when level the 100 hPa is reached. In any case, a BUFR (or CREX) message shall be produced when the sounding is completed containing data from the entire sounding.

BUFR templates for wind vertical profiles suitable for PILOT, PILOT SHIP and PILOT MOBIL observation data:

TM 309050 - BUFR template for wind vertical profiles with pressure as the vertical coordinate

3 09 050		**Sequence for representation PILOT, PILOT SHIP and PILOT MOBIL observation type data with pressure as the vertical coordinate**
	3 01 110	Identification of launch site and instrumentation for wind measurement
	3 01 113	Date/time of launch
	3 01 114	Horizontal and vertical coordinates of launch site
	1 01 000	Delayed replication of 1 descriptor
	0 31 002	Extended delayed descriptor replication factor
	3 03 050	Wind data at a pressure level
	1 01 000	Delayed replication of 1 descriptor
	0 31 001	Delayed descriptor replication factor
	3 03 051	Wind shear data at a pressure level

TM 309051 - BUFR template for wind vertical profiles with height as the vertical coordinate

3 09 051		**Sequence for representation PILOT, PILOT SHIP and PILOT MOBIL observation type data with height as the vertical coordinate**
	3 01 110	Identification of launch site and instrumentation for wind measurement
	3 01 113	Date/time of launch
	3 01 114	Horizontal and vertical coordinates of launch site
	1 01 000	Delayed replication of 1 descriptor
	0 31 002	Extended delayed descriptor replication factor
	3 03 052	Wind data at a height level
	1 01 000	Delayed replication of 1 descriptor
	0 31 001	Delayed descriptor replication factor
	3 03 053	Wind shear data at a height level

BUFR template TM 309050 for wind vertical profiles *(with pressure as the vertical coordinate)* is further expanded as follows:

3 01 110		**Identification of launch site and instrumentation**	
	3 01 001	WMO block number	Numeric
		WMO station number	Numeric
	0 01 011	Ship or mobile land station identifier	CCITT IA5
	0 02 011	Radiosonde type	Code table
	0 02 014	Tracking technique/status of system used	Code table
	0 02 003	Type of measuring equipment used	Code table
3 01 113		**Date/time of launch**	
	0 08 021	Time significance (= 18 (launch time))	Code table
	3 01 011	Year	Year
		Month	Month
		Day	Day
	3 01 013	Hour	Hour
		Minute	Minute

		Second	Second
3 01 114		**Horizontal and vertical coordinates of launch site**	
	3 01 021	Latitude (high accuracy)	Degree, scale 5
		Longitude (high accuracy)	Degree, scale 5
	0 07 030	Height of station ground above mean sea level	m, scale 1
	0 07 031	Height of barometer above mean sea level	m, scale 1
	0 07 007	Height of release of sonde above mean sea level	m
	0 33 024	Station elevation quality mark (for mobile stations)	Code table
		Wind data at pressure levels	
1 01 000		Delayed replication of 1 descriptor	
0 31 002		Extended delayed descriptor replication factor	Numeric
3 03 050		**Wind data at a pressure level**	
	0 04 086	Long time period or displacement (since launch time)	Second
	0 08 042	Extended vertical sounding significance	Flag table
	0 07 004	Pressure	Pa, scale –1
	0 05 015	Latitude displacement since launch site (high accuracy)	Degree, scale 5
	0 06 015	Longitude displacement since launch site (high accuracy)	Degree, scale 5
	0 11 001	Wind direction	Degree true
	0 11 002	Wind speed	m s^{-1}, scale 1
		Wind shear data	
1 01 000		Delayed replication of 1 descriptor	
0 31 001		Delayed descriptor replication factor	Numeric
3 03 051		**Wind shear data at a pressure level**	
	0 04 086	Long time period or displacement (since launch time)	Second
	0 08 042	Extended vertical sounding significance	Flag table
	0 07 004	Pressure	Pa, scale –1
	0 05 015	Latitude displacement since launch site (high accuracy)	Degree, scale 5
	0 06 015	Longitude displacement since launch site (high accuracy)	Degree, scale 5
	0 11 061	Absolute wind shear in 1 km layer below	m s^{-1}, scale 1
	0 11 062	Absolute wind shear in 1 km layer above	m s^{-1}, scale 1

Notes:

(1) Time of launch 3 01 013 shall be reported with the highest possible accuracy available. If the launch time is not available with second accuracy, the entry for seconds shall be put to zero.

(2) Long time displacement 0 04 086 represents the time offset from the launch time 3 01 013 (in seconds).

(3) Latitude displacement 0 05 015 represents the latitude offset from the latitude of the launch site. Longitude displacement 0 06 015 represents the longitude offset from the longitude of the launch site.

(4) If maximum wind data and/or wind shear data are reported with height as the vertical coordinate in Parts A or C of Pilot report, while the whole vertical wind profile is reported with pressure as the vertical coordinate, the data may be converted into BUFR using sequence 3 09 050 because the maximum wind data are as significant levels also included in Parts B or D (being identified by pressure as the vertical coordinate), provided that Part B and D are available when the entire wind profile is produced in BUFR or CREX.

BUFR template 3 09 051 for wind vertical profiles *(with height as the vertical coordinate)* is further expanded as follows:

3 01 110		**Identification of launch site and instrumentation for wind measurements**	
	3 01 001	WMO block number	Numeric
		WMO station number	Numeric

	0 01 011	Ship or mobile land station identifier	CCITT IA5
	0 02 011	Radiosonde type	Code table
	0 02 014	Tracking technique/status of system used	Code table
	0 02 003	Type of measuring equipment used	Code table
3 01 113		**Date/time of launch**	
	0 08 021	Time significance (= 18 (launch time))	Code table
	3 01 011	Year	Year
		Month	Month
		Day	Day
	3 01 013	Hour	Hour
		Minute	Minute
		Second	Second
3 01 114		**Horizontal and vertical coordinates of launch site**	
	3 01 021	Latitude (high accuracy)	Degree, scale 5
		Longitude (high accuracy)	Degree, scale 5
	0 07 030	Height of station ground above mean sea level	m, scale 1
	0 07 031	Height of barometer above mean sea level	m, scale 1
	0 07 007	Height of release of sonde above mean sea level	m
	0 33 024	Station elevation quality mark (for mobile stations)	Code table
		Wind data at heights	
1 01 000		Delayed replication of 1 descriptor	
0 31 002		Extended delayed descriptor replication factor	Numeric
3 03 052		**Wind data at a height level**	
	0 04 086	Long time period or displacement (since launch time)	Second
	0 08 042	Extended vertical sounding significance	Flag table
	0 07 009	Geopotential height	gpm
	0 05 015	Latitude displacement since launch site (high accuracy)	Degree, scale 5
	0 06 015	Longitude displacement since launch site (high accuracy)	Degree, scale 5
	0 11 001	Wind direction	Degree true
	0 11 002	Wind speed	m s^{-1}, scale 1
		Wind shear data at heights	
1 01 000		Delayed replication of 1 descriptor	
0 31 001		Delayed descriptor replication factor	Numeric
3 03 053		**Wind shear data at a height level**	
	0 04 086	Long time period or displacement (since launch time)	Second
	0 08 042	Extended vertical sounding significance	Flag table
	0 07 009	Geopotential height	gpm
	0 05 015	Latitude displacement since launch site (high accuracy)	Degree, scale 5
	0 06 015	Longitude displacement since launch site (high accuracy)	Degree, scale 5
	0 11 061	Absolute wind shear in 1 km layer below	m s^{-1}, scale 1
	0 11 062	Absolute wind shear in 1 km layer above	m s^{-1}, scale 1

Notes:

(1) Time of launch 3 01 013 shall be reported with the highest possible accuracy available. If the launch time is not available with second accuracy, the entry for seconds shall be put to zero.

(2) Long time displacement 0 04 086 represents the time offset from the launch time 3 01 013 (in seconds)

(3) Latitude displacement 0 05 015 represents the latitude offset from the latitude of the launch site. Longitude displacement 0 06 015 represents the longitude offset from the longitude of the launch site.

Regulations:

B/C 20.1 Section 1 of BUFR or CREX

B/C 20.2 Identification of launch site and instrumentation

B/C 20.3 Date/time of launch

B/C 20.4 Horizontal and vertical coordinates of launch site

B/C 20.5 Wind data at pressure levels

B/C 20.6 Wind data at height levels
B/C 20.7 Criteria for reporting standard and significant levels
B/C 20.8 Wind shear data at pressure levels
B/C 20.9 Wind shear data at pressure levels
B/C 20.10 Data required by regional or national reporting practices

B/C 20.1 Section 1 of BUFR or CREX

B/C 20.1.1 Entries required in Section 1 of BUFR

The following entries shall be included in BUFR Section 1:

- BUFR master table,
- identification of originating/generating centre,
- identification of originating/generating sub-centre,
- update sequence number,
- identification of inclusion of optional section,
- data category (= 002 for all PILOT type data),
- international data sub-category (1), (2),
- local data subcategory,
- version number of master table,
- version number of local tables,
- year (year of the century up to BUFR edition 3),
- month (standard time),
- day (standard time = YY in the abbreviated telecommunication header for all PILOT type data),
- hour (standard time = GG in the abbreviated telecommunication header for all PILOT type data),
- minute (standard time = 00 for all PILOT type data).

- Notes:
  (1) Inclusion of this entry is required starting with BUFR edition 4.
  (2) If required, the international data sub-category shall be included at all observation times as follows:
  = 001 for PILOT data,
  = 002 for PILOT SHIP data,
  = 003 for PILOT MOBIL data.

B/C 20.1.2 Entries required in Section 1 of CREX

The following entries shall be included in CREX Section 1:

- CREX master table,
- CREX edition number,
- CREX table version number,
- version number of BUFR master table (1),
- version number of local tables (1),
- data category (= 002 for all PILOT type data),
- international data sub-category (1), (2),
- identification of originating/generating centre (1),
- identification of originating/generating sub-centre (1),
- update sequence number (1),
- number of subsets (1),

- year (standard time) (1),
- month (standard time) (1),
- day (standard time = YY in the abbreviated telecommunication header for all PILOT type data) (1),
- hour (standard time = GG in the abbreviated telecommunication header for all PILOT type data) (1),
- minute (standard time = 00 for all PILOT type data) (1).

Notes:
(1) Inclusion of these entries is required starting with CREX edition 2.
(2) If inclusion of international data sub-category is required, Note (2) under B/C 20.1.1 applies.

B/C 20.2 Identification of launch site and instrumentation <3 01 110>

B/C 20.2.1 Identification of launch site

WMO block number station (0 01 001) and WMO station number (0 01 002) shall be always reported as a non-missing value in reports from a fixed land station.

Ship or mobile land station identifier (0 01 011) shall be always reported not exceeding 9 characters in reports from ships or mobile stations. [32.2.1]

B/C 20.2.1 Instrumentation for wind measurement

Radiosonde type (Code table 0 02 011), tracking techniques/status of system used (Code table 0 02 014) and type of measuring equipment used (Code table 0 02 003) shall be reported.

B/C 20.3 Date/time of launch <3 01 113>

Time significance (0 08 021) shall be always set to 18 to indicate that the following entries specify the date and time of launching the radiosonde.

Date of launch <3 01 011> and time of launch <3 01 013> shall be reported, i.e. year (0 04 001), month (0 04 002), day (0 04 003)> and hour (0 04 004), minute (0 04 005) and second (0 04 006) of the actual time of launch shall be reported.
Note:
(1) Time of launch <3 01 013> shall be reported with the highest possible accuracy available. If the launch time is not available with second accuracy, the entry 0 04 006 for seconds shall be set to zero.

B/C 20.4 Horizontal and vertical coordinates of launch site <3 01 114>

Latitude (0 05 001) and longitude (0 06 001) of the launch site shall be reported in degrees with precision in 10^{-5} of a degree.

Height of station ground above mean sea level (0 07 030) and height of barometer above mean sea level (0 07 031) shall be reported in meters with precision in tenths of a meter.

Height of release of sonde above mean sea level (0 07 007) shall be reported in meters.

Station elevation quality mark (Code table 0 33 024) shall be reported to indicate the accuracy of the vertical coordinates of the mobile land station. Fixed land stations and sea stations shall report this datum as a missing value. [32.2.1]

B/C 20.5 Wind data at pressure levels

Wind data at pressure levels shall be always reported using *template TM 309050* and shall be included in descending order with respect to pressure. Data at each pressure level shall be included only once. For example, if a significant level with respect to wind and a standard level coincide, data for that level shall be included only once, the multiple attributes being indicated by Extended vertical sounding significance (Flag table 0 08 042) as specified in Regulation B/C 20.5.2.2.

Note:

(1) If data are produced and collected in traditional PILOT codes, the order of pressure levels may correspond to the order of levels in Parts A, B, C and D, when converted into BUFR or CREX. In this case, data at a level may be included more than once.

B/C 20.5.1 Number of reported pressure levels

The number of reported pressure levels shall be indicated by Extended delayed descriptor replication factor 0 31 002 in BUFR and by a four-digit number in the Data Section corresponding to the position of the replication descriptor in the Data Description Section of CREX.

Notes:

(1) The number of pressure levels shall never be set to a missing value.
(2) The number of pressure levels shall be set to a positive value in a NIL report.

B/C 20.5.1.1

All required data from the entire ascent shall be reported in a BUFR (or CREX) message that shall be produced when the sounding is completed. In interest of timely data delivery, however, a BUFR (or CREX) message should be sent when level 100 hPa is reached.

B/C 20.5.2 Wind data at a pressure level <3 03 050>

B/C 20.5.2.1 Long time displacement (since launch time)

Long time displacement (0 04 086) represents the time offset from the launch time specified in Regulation 20.3, and shall be reported in seconds if available.

B/C 20.5.2.2 Extended vertical sounding significance – Flag table 0 08 042

This datum shall be used to specify vertical sounding significance in the following way:

(a) Bit No. 1 set to 1 indicates surface (see Regulation B/C 20.7.1).
(b) Bit No. 2 set to 1 indicates a standard level (see Regulation B/C 20.7.2).
(c) Bit No. 4 set to 1 indicates a maximum wind level (see Regulation B/C 20.7.3).
(d) Bit No. 7 set to 1 indicates a level significant with respect to wind (see Regulation B/C 20.7.4).
(e) Bit No. 12 set to 1 indicates beginning of missing wind data bit No. 13 set to 1 indicates end of missing wind data (see Regulation B/C 20.7.5).
(f) Bit No. 14 set to 1 indicates the top of wind sounding.

(g) Bit No. 15 set to 1 indicates a level determined by regional decision.
(h) Bit No. 17 set to 1 indicates a pressure level originally identified by height as the vertical coordinate.
(i) All bits set to 0 indicate a level determined by national decision.
(j) All bits set to 1 indicate a missing value.

B/C 20.5.2.3 Pressure

Pressure (0 07 004) shall be reported in pascals (with precision in tens of a pascal).

Notes:

(1) Pressure as the vertical coordinate shall be used when template TM 309050 is applied.
(2) Pressure as the only vertical coordinate shall be used in a report. [32.3.1.4]

B/C 20.5.2.4 Latitude and longitude displacements

Latitude displacement (0 05 015) represents the latitude offset from the latitude of the launch site specified in Regulation 20.4, and shall be reported in degrees with precision in 10^{-5} of a degree if available. Longitude displacement 0 06 015 represents the longitude offset from the longitude of the launch site specified in Regulation 20.4, and shall be reported in degrees with precision in 10^{-5} of a degree if available.

B/C 20.5.2.5 Wind direction and speed

The wind direction (0 11 001) shall be reported in degrees true and the wind speed (0 11 002) shall be reported in meters per second (with precision in tenths of a meter per second).

B/C 20.6 Wind data at height levels

Wind data at height levels shall be always reported using *template TM 309051* and shall be included in ascending order with respect to altitude. Data at each height level shall be included only once. For example, if a significant level with respect to wind and a standard level coincide, data for that level shall be included only once, the multiple attributes being indicated by Extended vertical sounding significance (Flag table 0 08 042) as specified in Regulation B/C 20.5.2.2.

Note:

(1) If data are produced and collected in traditional PILOT codes, the order of height levels may correspond to the order of levels in Parts A, B, C and D, when converted into BUFR or CREX. In this case, data at a level may be included more than once.

B/C 20.6.1 Number of reported height levels

The number of reported height levels shall be indicated by Extended delayed descriptor replication factor 0 31 002 in BUFR and by a four-digit number in the Data Section corresponding to the position of the replication descriptor in the Data Description Section of CREX.

Notes:

(1) The number of height levels shall never be set to a missing value.
(2) The number of height levels shall be set to a positive value in a NIL report.

B/C 20.6.1.1

Regulation B/C 20.5.1.1 shall apply.

B/C 20.6.2 Wind data at a height level <3 03 052>

B/C 20.6.2.1 Long time displacement (since launch time)

Long time displacement (0 04 086) represents the time offset from the launch time specified in Regulation 20.3, and shall be reported in seconds if available.

B/C 20.6.2.2 Extended vertical sounding significance – Flag table 0 08 042

Regulation B/C 20.5.2.2 shall apply.

B/C 20.6.2.3 Geopotential height

Geopotential height of the level (0 07 009) shall be reported in geopotential meters.

Notes:

(1) Geopotential height as the vertical coordinate shall be used when template TM 309051 is applied.

(2) Geopotential height as the only vertical coordinate shall be used in a report. [32.3.1.4]

B/C 20.6.2.4 Latitude and longitude displacements

Regulation B/C 20.5.2.4 shall apply.

B/C 20.6.2.5 Wind direction and speed

Regulation B/C 20.5.2.5 shall apply.

B/C 20.7 Criteria for reporting standard and significant levels

B/C 20.7.1 Surface

The surface level shall be always reported.

Note:

(1) The value of Extended vertical sounding significance 0 08 042 at the surface level shall indicate that this level is also a level significant with respect to wind, i.e. bit No.1 and also bit No. 7 shall be set to 1.

B/C 20.7.2 Standard levels

B/C 20.7.2.1

The standard levels of 850, 700, 500, 400, 300, 250, 200, 150, 100, 70, 50, 30, 20 and 10 hPa shall be reported in descending order with respect to pressure (in ascending order with respect to altitude). [32.2.2.1]

B/C 20.7.2.2

When pressure measurements are not available, wind data shall be reported using geopotential approximations to the standard isobaric surfaces. [32.2.2.2]

B/C 20.7.2.3

When wind data at a standard level are not available, the corresponding entries for that level shall be reported as missing values. [32.2.2.3]

B/C 20.7.2.4

When the standard levels are located by means of pressure equipment and if the pressure element failed during the ascent, the remaining standard levels to be reported shall be indicated by 0 08 042 - bit No. 2 set to 1 (standard level) and by bit No. 17 set to 1 (a pressure level originally identified by

height as the vertical coordinate) [32.2.2.4]

B/C 20.7.3 Maximum wind level(s)

B/C 20.7.3.1

When a maximum wind level (one or more) is reported, the corresponding number of levels shall be included in the report indicated by 0 08 042 - bit No. 4 set to 1. [32.2.3.3]

Notes:

(1) Criteria for determining maximum wind levels are given in Regulations B/C 20.7.3.3 and B/C 20.7.3.4 below.

(2) As a maximum wind level is also a level significant with respect to wind, bit No. 7 as well as bit No. 4 shall be set to 1 in the Extended vertical sounding significance 0 08 042.

B/C 20.7.3.2

When no maximum wind level is observed, no level shall be indicated by bit No. 4 of 0 08 042 set to 1. [32.2.3.4.5]

B/C 20.7.3.3

A maximum wind level:

(a) Shall be determined by consideration of the list of significant levels for wind speed, as obtained by means of the relevant recommended or equivalent national method (see Note under Regulation B/C 20.7.4.2) and *not* by consideration of the original wind-speed curve;

(b) Shall be located above the 500-hPa isobaric surface and shall correspond to a speed of more than 30 meters per second.

Note:

(1) A maximum wind level is defined as a level at which the wind speed is greater than that observed immediately above and below that level. [32.2.3.1]

B/C 20.7.3.4

Whenever more than one maximum wind level exists, these levels shall be reported as follows:

(a) The level of greatest maximum wind speed shall be always included;

(b) The other levels shall be included in the report only if their speed exceeds those of the two adjacent minima by at least 10 meters per second;

(c) Furthermore, the highest level attained by the sounding shall be indicated as a maximum wind level, provided:

(i) It satisfies the criteria set forth in Regulation B/C 20.7.3.3 above;

(ii) It constitutes the level of the greatest speed of the whole sounding. [32.2.3.2]

B/C 20.7.3.5

When the greatest wind speed observed throughout the sounding occurred at the top of the sounding, this level shall be indicated by 0 08 042 - bit No. 4 set to 1 (maximum wind level), bit No. 7 set to 1 (level significant with respect to wind) and bit No. 14 set to 1 (top of wind sounding). [32.2.3.4.3], [32.2.3.4.4]

B/C 20.7.3.6

In compliance with Regulation B/C 20.5.2.3 or B/C 20.6.2.3, maximum wind level data shall be reported with the same vertical coordinate as the other data in the profile, using template TM 309050 or template TM 309051 for the entire sounding.

Note:

(1) If data are produced and collected in traditional PILOT codes, maximum wind data may be reported with height as the vertical coordinate in Parts A or C of Pilot report, while the whole vertical wind profile is reported with pressure as the vertical coordinate. Even in this case, the maximum wind data may be converted into BUFR using sequence 3 09 050 because the maximum wind data were

selected from the list of significant levels with respect to wind. And these significant levels are included in Parts B or D of Pilot report, identified by pressure as the vertical coordinate. [32.3.1.4]

B/C 20.7.4 Levels significant with respect to wind

B/C 20.7.4.1

Significant wind levels shall be chosen so that the data from them *alone* shall make it possible to reconstruct the wind profile with sufficient accuracy for practical use. [32.3.1.1]

B/C 20.7.4.2

Criteria for determining significant levels with respect to changes in wind speed and direction:

(a) The direction of speed curves (in function of the log of pressure or altitude) can be reproduced with their prominent characteristics;

(b) These curves can be reproduced with the accuracy of at least 10 for direction and five meters per second for speed;

Note:

To satisfy these criteria, the following method of successive approximations is recommended, but other methods of attaining equivalent results may suit some national practices better and may be used:

(i) The surface level and highest level for which wind data are available constitute the first and the last significant levels.
The deviation from the linearly interpolated values between these two levels is then considered. If no direction deviates by more than 10 and no speed by more than five meters per second, no other significant level need be reported. Whenever one parameter deviates by more than the limit specified in paragraph (b) above the level of greatest deviation becomes a supplementary significant level for both parameters.

(ii) The additional significant levels so introduced divide the sounding into two layers. In each separate layer, the deviation from the linearly interpolated values between the base and the top are then considered. The process used in paragraph (i) above is repeated and yields other significant levels. These additional levels in turn modify the layer distribution, and the method is applied again until any level is approximated to the above-mentioned specified values. [32.3.1.1]

B/C 20.7.5 Beginning and end of missing wind data

B/C 20.7.5.1

If wind profile data are reported with pressure as the vertical coordinate, a layer for which wind data are missing shall be indicated by reporting the boundary levels of the layer, provided that the layer is at least 50 hPa thick. The boundary levels are the levels closest to the bottom and the top of the layer for which the observed data are available. The boundary levels are not required to meet “significant wind level” criteria. [32.3.1.5.2]

B/C 20.7.5.2

If wind profile data are reported with height as the vertical coordinate, a layer for which wind data are missing shall be indicated by reporting the boundary levels of the layer, provided that the layer is at least 1 500 geopotential meters thick. The boundary levels are the levels closest to the bottom and the top of the layer for which the observed data are available. The boundary levels are not required to meet “significant wind level” criteria. [32.3.1.5.1]

B/C 20.8 Wind shear data at pressure levels

B/C 20.8.1 Number and order of levels for which wind shear is reported

B/C 20.8.1.1

The number of levels with wind shear data shall be indicated by Delayed descriptor replication factor 0

31 001 in BUFR and by a four-digit number in the Data Section corresponding to the position of the replication descriptor in the Data Description Section of CREX.

Notes:

(1) The number of levels with wind shear data shall never be set to a missing value.
(2) The number of levels with wind shear data shall be set to a positive value in a NIL report.
(3) The number of levels with wind shear data shall be set to zero if data for vertical wind shear are not computed and required. [32.2.3.5]

B/C 20.8.1.2

Whenever wind shear data are reported for more than one level, these maximum wind levels shall be included in the same order as in the sequence <3 03 050>, i.e. in descending order with respect to pressure.

B/C 20.8.2 Wind shear data at a pressure level <3 03 051>

B/C 20.8.2.1 Long time displacement (since launch time)

Long time displacement (0 04 086) represents the time offset from the launch time specified in Regulation 20.3, and shall be reported in seconds if available.

B/C 20.8.2.2 Extended vertical sounding significance – Flag table 0 08 042

A level, for which wind shear data are reported, shall be indicated by vertical sounding significance 0 08 042 - bit No. 4 set to 1 (maximum wind level) and by bit No. 7 set to 1 (level significant with respect to wind). Moreover, if the top of the wind sounding corresponds to the highest wind speed observed throughout the ascent, this level shall be indicated also by bit No. 14 set to 1 (top of wind sounding).

B/C 20.8.2.3 Pressure

Pressure (0 07 004) shall be reported in pascals with precision in tens of a pascal.

B/C 20.8.2.4 Latitude and longitude displacements

Latitude displacement (0 05 015) represents the latitude offset from the latitude of the launch site specified in Regulation 20.4, and shall be reported in degrees with precision in 10^{-5} of a degree if available. Longitude displacement 0 06 015 represents the longitude offset from the longitude of the launch site specified in Regulation 20.4, and shall be reported in degrees with precision in 10^{-5} of a degree if available.

B/C 20.8.2.5 Wind shear data

Absolute wind shear in 1 km layer below (0 11 061) and absolute wind shear in 1 km layer above (0 11 062) shall be reported in meters per second (with precision in tenths of a meter per second), if data for vertical wind shear are computed and required. [32.2.3.5]

B/C 20.9 Wind shear data at heights

B/C 20.9.1 Number and order of levels for which wind shear is reported

B/C 20.9.1.1

Regulation B/C 20.8.1.1 shall apply.

B/C 20.9.1.2

Whenever wind shear data are reported for more than one level, these maximum wind levels shall be included in the same order as in the sequence <3 03 052>, i.e. in ascending order with respect to altitude.

B/C 20.9.2 Wind shear data at a height level <3 03 053>

B/C 20.9.2.1 Long time displacement (since launch time)

Long time displacement (0 04 086) represents the time offset from the launch time specified in Regulation 20.3, and shall be reported in seconds if available.

B/C 20.9.2.2 Extended vertical sounding significance – Flag table 0 08 042

Regulation B/C 20.8.2.2 shall apply.

B/C 20.9.2.3 Geopotential height

Geopotential height of the level (0 07 009) shall be reported in geopotential meters.

B/C 20.9.2.4 Latitude and longitude displacements

Regulation B/C 20.8.2.4 shall apply.

B/C 20.9.2.5 Wind shear data

Regulation B/C 20.8.2.5 shall apply.

B/C 20.10 Data required by regional or national reporting practices

If regional or national reporting practices require inclusion of wind data at additional levels, these data shall be reported using sequence <3 03 050> for wind data at a pressure level or sequence <3 03 052> for wind data at a height level. Regulation B/C 20.5 or Regulation B/C 20.6 shall apply.

Notes:

(1) A level determined by regional decision shall be indicated by Extended vertical sounding significance 0 08 042 - bit No. 15 set to 1.

(2) A level determined by national decision shall be indicated by Extended vertical sounding significance 0 08 042 – all bits set to 0.

B/C 20.10.1 Additional data required by reporting practices in RA I

Wind data at additional levels 600, 900, 2 100, 3 900, 4 500, 5 100, 21 000, and all successive levels at 3 000 m intervals, shall be reported in compliance with Regulation B/C 20.10 and Note (1) under this regulation. [1/32.2] [1/32.4.1]

B/C 20.10.2 Additional data required by reporting practices in RA II

B/C 20.10.2.1

Wind data at additional levels 300, 600, 900, 2 100, 3 600, 4 500, 6 000 m shall be reported in compliance with Regulation B/C 20.10 and Note (1) under this regulation. [2/32.3]

B/C 20.10.2.2

The inclusion of wind shear data shall be left to national decision. Members are recommended to include these data as often as possible. [2/32.2]

B/C 20.10.3 Additional data required by reporting practices in RA III

Wind data at additional levels 300, 600, 900, 2 100, 2 400, 4 200, 6 000, 8 100, 33 000 m, and all successive levels at 3 000 m intervals, shall be reported in compliance with Regulation B/C 20.10 and Note (1) under this regulation. [3/32.2] [3/32.4.1]

B/C 20.10.4 Additional data required by reporting practices in RA IV

Wind data at additional levels 300, 600, 900, 1 200, 1 800, 2 100, 2 400, 2 700, 3 600, 4200, 4 800, 6 000, 7 500, 9 000, 15 000 m, and all successive levels at 3 000 m intervals, shall be reported in compliance with Regulation B/C 20.10 and Note (1) under this regulation. [4/32.2] [4/32.4.1]

B/C 20.10.5 Additional data required by reporting practices in RA V

Wind data at additional levels 900, 2 100, 4 200 m shall be reported in compliance with Regulation B/C 20.10 and Note (1) under this regulation. [5/32.3]

B/C 20.10.6 Additional data required by reporting practices in RA VI

B/C 20.10.6.1

Wind data at additional levels 900, 800, 600 hPa (with pressure as the vertical coordinate) and at levels 1 000, 2 000, 4 000 m or 900, 2 100, 4 200 m (with height as the vertical coordinate), shall be reported in compliance with Regulation B/C 20.10 and Note (1) under this regulation. [6/32.3.1]

B/C 20.10.6.2

The inclusion of wind shear data shall be left to national decision. Members are recommended to include these data as often as possible. [6/32.2] [6/32.5]

B/C25 – Regulations for reporting TEMP, TEMP SHIP and TEMP MOBIL data in TDCF
General

A BUFR (or CREX) message should be sent when level the 100 hPa is reached. In any case, a BUFR (or CREX) message shall be produced when the sounding is completed containing data from the entire sounding.

TM 309052 - BUFR template for P, T, U and wind vertical profiles suitable for TEMP, TEMP SHIP and TEMP MOBIL observation data

3 09 052		**Sequence for representation TEMP, TEMP SHIP and TEMP MOBIL observation type data**
	3 01 111	Identification of launch site and instrumentation
	3 01 113	Date/time of launch
	3 01 114	Horizontal and vertical coordinates of launch site
	3 02 049	Cloud information reported with vertical soundings
	0 22 043	Sea/water temperature (for ship stations)
	1 01 000	Delayed replication of 1 descriptor
	0 31 002	Extended delayed descriptor replication factor
	3 03 054	Temperature, dew-point and wind data at a pressure level
	1 01 000	Delayed replication of 1 descriptor
	0 31 001	Delayed descriptor replication factor
	3 03 051	Wind shear data at a pressure level

This BUFR template for P, T, U and wind profiles further expands as follows:

3 01 111		**Identification of launch site and instrumentation**	
	3 01 001	WMO block number	Numeric
		WMO station number	Numeric
	0 01 011	Ship or mobile land station identifier	CCITT IA5
	0 02 011	Radiosonde type	Code table
	0 02 013	Solar and infrared radiation correction	Code table
	0 02 014	Tracking technique/status of system used	Code table
	0 02 003	Type of measuring equipment used	Code table
3 01 113		**Date/time of launch**	
	0 08 021	Time significance (= 18 (launch time))	Code table
	3 01 011	Year	Year
		Month	Month
		Day	Day
	3 01 013	Hour	Hour
		Minute	Minute
		Second	Second
3 01 114		**Horizontal and vertical coordinates of launch site**	
	3 01 021	Latitude (high accuracy)	Degree, scale 5
		Longitude (high accuracy)	Degree, scale 5
	0 07 030	Height of station ground above mean sea level	m, scale 1
	0 07 031	Height of barometer above mean sea level	m, scale 1
	0 07 007	Height of release of sonde above mean sea level	m
	0 33 024	Station elevation quality mark (for mobile stations)	Code table

3 02 049		**Cloud information reported with vertical soundings**	
	0 08 002	Vertical significance	Code table
	0 20 011	Cloud amount (of low or middle clouds N_h)	Code table
	0 20 013	Height of base of cloud (h)	m, scale –1
	0 20 012	Cloud type (low clouds C_L)	Code table
	0 20 012	Cloud type (middle clouds C_M)	Code table
	0 20 012	Cloud type (high clouds C_H)	Code table
	0 08 002	Vertical significance (= missing value)	Code table
0 22 043		Sea/water temperature (for ship stations)	K, scale 2
		Temperature, dew-point and wind data at pressure levels	
1 01 000		Delayed replication of 1 descriptor	
0 31 002		Extended delayed descriptor replication factor	Numeric
3 03 054		**Temperature, dew-point and wind data at a pressure level with radiosonde position**	
	0 04 086	Long time period or displacement (since launch time)	Second
	0 08 042	Extended vertical sounding significance	Flag table
	0 07 004	Pressure	Pa, scale –1
	0 10 009	Geopotential height	gpm
	0 05 015	Latitude displacement since launch site (high accuracy)	Degree, scale 5
	0 06 015	Longitude displacement since launch site (high accuracy)	Degree, scale 5
	0 12 101	Temperature/dry-bulb temperature (scale 2)	K, scale 2
	0 12 103	Dew-point temperature (scale 2)	K, scale 2
	0 11 001	Wind direction	Degree true
	0 11 002	Wind speed	m s^{-1}, scale 1
		Wind shear data	

1 01 000		Delayed replication of 1 descriptor	
0 31 001		Delayed descriptor replication factor	Numeric
3 03 051		**Wind shear data at a pressure level**	
	0 04 086	Long time period or displacement (since launch time)	Second
	0 08 042	Extended vertical sounding significance	Flag table
	0 07 004	Pressure	Pa, scale –1
	0 05 015	Latitude displacement since launch site (high accuracy)	Degree, scale 5
	0 06 015	Longitude displacement since launch site (high accuracy)	Degree, scale 5
	0 11 061	Absolute wind shear in 1 km layer below	m s^{-1}, scale 1
	0 11 062	Absolute wind shear in 1 km layer above	m s^{-1}, scale 1

Notes: (1) Time of launch 3 01 013 shall be reported with the highest possible accuracy available. If the launch time is not available with second accuracy, the entry for seconds shall be put to zero.

(2) Long time displacement 0 04 086 represents the time offset from the launch time 3 01 013 (in seconds)

(3) Latitude displacement 0 05 015 represents the latitude offset from the latitude of the launch site. Longitude displacement 0 06 015 represents the longitude offset from the longitude of the launch site.

(4) If additional information on sounding instrumentation is required, the sequence <3 09 052> may be supplemented by one or more additional parameters to allow data representation of this information, e.g. Radiosonde serial number (0 01 081).

Regulations:

B/C 25.1 Section 1 of BUFR or CREX

B/C 25.2 Identification of launch site and instrumentation

B/C 25.3 Date/time of launch

B/C 25.4 Horizontal and vertical coordinates of launch site

B/C 25.5 Cloud information reported with vertical soundings

B/C 25.6 Sea/water temperature (for ship stations)

B/C 25.7 Temperature, dew-point and wind data at pressure levels

B/C 25.8 Criteria for reporting standard and significant levels

B/C 25.9 Wind shear data

B/C 25.10 Data required by regional or national reporting practices

B/C 25.11 Other additional data

B/C 25.1 Section 1 of BUFR or CREX

B/C 25.1.1 Entries required in Section 1 of BUFR

The following entries shall be included in BUFR Section 1:

- BUFR master table,
- identification of originating/generating centre,
- identification of originating/generating sub-centre,
- update sequence number,
- identification of inclusion of optional section,
- data category (= 002 for all TEMP type data),
- international data sub-category [(1), (2)],

- local data subcategory,
- version number of master table,
- version number of local tables,
- year (year of the century up to BUFR edition 3),
- month (standard time),
- day (standard time = YY in the abbreviated telecommunication header for TEMP, TEMP SHIP and TEMP MOBIL type data),
- hour (standard time = GG in the abbreviated telecommunication header for TEMP, TEMP SHIP and TEMP MOBIL type data),
- minute (standard time = 00 for TEMP, TEMP SHIP and TEMP MOBIL type data).

Notes:

(1)Inclusion of this entry is required starting with BUFR edition 4.

(2)If required, the international data sub-category shall be included at all observation times as follows:

= 004 for TEMP data,
= 005 for TEMP SHIP data,
= 006 for TEMP MOBIL data.

B/C 25.1.2 Entries required in Section 1 of CREX

The following entries shall be included in CREX Section 1:

- CREX master table,
- CREX edition number,
- CREX table version number,
- version number of BUFR master table (1),
- version number of local tables (1),
- data category (= 002 for all TEMP type data),
- international data sub-category (1), (2),
- identification of originating/generating centre (1),
- identification of originating/generating sub-centre (1),
- update sequence number (1),
- number of subsets (1),
- year (standard time) (1),
- month (standard time) (1),
- day (standard time = YY in the abbreviated telecommunication header for TEMP, TEMP SHIP and TEMP MOBIL type data) (1),
- hour (standard time = GG in the abbreviated telecommunication header for TEMP, TEMP SHIP and TEMP MOBIL type data) (1),
- minute (standard time = 00 for TEMP, TEMP SHIP and TEMP MOBIL type data) (1).

Notes:

(1)Inclusion of these entries is required starting with CREX edition 2.

(2)If inclusion of international data sub-category is required, Note (2) under B/C 25.1.1 applies.

B/C 25.2 Identification of launch site and instrumentation <3 01 111>

B/C 25.2.1 Identification of launch site

WMO block number station (0 01 001) and WMO station number (0 01 002) shall be always reported as a non-missing value in reports from a fixed land station.

Ship or mobile land station identifier (0 01 011) shall be always reported not exceeding 9 characters in reports from ships or mobile land stations. [35.2.1]

B/C 25.2.1 Instrumentation for P, T, U and wind measurement

Radiosonde type (Code table 0 02 011), solar and infrared radiation correction (Code table 0 02 013), tracking techniques/status of system used (Code table 0 02 014) and type of measuring equipment used (Code table 0 02 003) shall be reported. [35.2.5]

B/C 25.3 Date/time of launch <3 01 113>

Time significance (0 08 021) shall be always set to 18 to indicate that the following entries specify the date and time of launching the radiosonde.

Date of launch <3 01 011> and time of launch <3 01 013> shall be reported, i.e. year (0 04 001), month (0 04 002), day (0 04 003)> and hour (0 04 004), minute (0 04 005) and second (0 04 006) of the actual time of launch shall be reported. [35.2.5]

Note:

(1) Time of launch <3 01 013> shall be reported with the highest possible accuracy available. If the launch time is not available with second accuracy, the entry 0 04 006 for seconds shall be set to zero.

B/C 25.4 Horizontal and vertical coordinates of launch site <3 01 114>

Latitude (0 05 001) and longitude (0 06 001) of the launch site shall be reported in degrees with precision in 10^{-5} of a degree.

Height of station ground above mean sea level (0 07 030) and height of barometer above mean sea level (0 07 031) shall be reported in meters with precision in tenths of a meter.

Height of release of sonde above mean sea level (0 07 007) shall be reported in meters.

Station elevation quality mark (Code table 0 33 024) shall be reported to indicate the accuracy of the vertical coordinates of the mobile land station. Fixed land stations and sea stations shall report this datum as a missing value. [35.2.1]

B/C 25.5 Cloud information reported with vertical sounding <3 02 049>

B/C 25.5.1 Vertical significance – Code table 0 08 002

To specify vertical significance (0 08 002) within the sequence 3 02 049, a code figure shall be selected in the following way:

(a) If low clouds are observed, then code figure 7 (Low cloud) shall be used.
(b) If there are no low clouds but middle clouds are observed, then code figure 8 (Middle clouds) shall be used.
(c) If there are no low and there are no middle clouds but high clouds are observed, then code figure 0 shall be used.
(d) If sky is obscured by fog and/or other phenomena, then code figure 5 (Ceiling) shall be used.
(e) If there are no clouds (clear sky), then code figure 62 (Value not aplicable) shall be used.
(f) If the cloud cover is not discernible for reasons other than (d) above or observation is not made, then code figure 63 (Missing value) shall be used.

B/C 25.5.2 Cloud amount (of low or middle clouds) – Code table 0 20 011

Amount of all the low clouds (clouds of the genera Stratocumulus, Stratus, Cumulus, and Cumulonimbus) present or, if no low clouds are present, the amount of all the middle clouds (clouds of the genera Altocumulus, Altostratus, and Nimbostratus) present.

B/C 25.5.2.1

Cloud amount shall be reported as follows:

(a) If there are low clouds, then the total amount of all low clouds, as actually seen by the observer during the observation shall be reported for the cloud amount.
(b) If there are no low clouds but there are middle clouds, then the total amount of the middle clouds shall be reported for the cloud amount.
(c) If there are no low clouds and there are no middle clouds but there are high clouds (clouds of the genera Cirrus, Cirrocumulus, and Cirrostratus), then the cloud amount shall be reported as zero. [35.3.4.1] [12.2.7.2.1]

B/C 25.5.2.2

Amount of Altocumulus perlucidus or Stratocumulus perlucidus (“mackerel sky”) shall be reported using code figure 7 or less since breaks are always present in this cloud form even if it extends over the whole celestial dome. [35.3.4.1] [12.2.7.2.2]

B/C 25.5.2.3

When the clouds reported for cloud amount are observed through fog or an analogous phenomenon, the cloud amount shall be reported as if these phenomena were not present. [35.3.4.1] [12.2.7.2.3]

B/C 25.5.2.4

If the clouds reported for cloud amount include contrails, then the cloud amount shall include the amount of persistent contrails. Rapidly dissipating contrails shall not be included in the value for the cloud amount. [35.3.4.1] [12.2.7.2.4]

B/C 25.5.3 Height of base of lowest cloud

Height above surface of the base (0 20 013) of the lowest cloud seen shall be reported in meters (with precision in tens of a meter).

Note:

(1) The term ” height above surface » shall be considered as being the height above the official aerodrome elevation or above station elevation at a non-aerodrome station.

B/C 25.5.3.1

When the station is in fog, a sandstorm or in blowing snow but the sky is discernable, the base of the lowest cloud shall refer to the base of the lowest cloud observed, if any. When, under the above conditions, the sky is not discernible, the base of the lowest cloud shall be reported as missing. [35.3.4.1] [12.2.1.2]

B/C 25.5.3.2

When no cloud are reported (Total cloud cover = 0) the base of the lowest cloud *shall be reported as a missing value.*

B/C 25.5.3.3

When, by national decision, clouds with bases below the station are reported from the station and clouds with bases below and tops above the station are observed, the base of the lowest cloud *shall be reported having a negative value if the base of cloud is discernible, or as a missing value.*

B/C 25.5.4. Cloud type of low, middle and high clouds - Code table 0 20 012

Clouds of the genera Stratocumulus, Stratus, Cumulus, and Cumulonimbus (low clouds) shall be reported for the first entry 0 20 012, clouds of the genera Altocumulus, Altostratus, and Nimbostratus (middle clouds) shall be reported for the second entry 0 20 012 and clouds of the genera Cirrus, Cirrocumulus, and Cirrostratus (high clouds) shall be reported for the third entry 0 20 012.

B/C 25.5.4.1

The reporting of type of low, middle and high clouds shall be as specified in publication WMO-NO. 407 – International Cloud Atlas, Volume I. [35.3.4.1], [12.2.7.3]

B/C 25.6 Sea/water temperature

Sea/water temperature (0 22 043) shall be reported in degrees Kelvin (with precision in hundredths of a degree Kelvin); if produced in CREX, in degrees Celsius (with precision in hundredths of a degree Celsius). Sea/water temperature data shall be reported with precision in hundredths of a degree even if they are available with the accuracy in tenths of a degree.

Note:

(1) Notes (1) and (2) under Regulation B/C 25.7.2.6 shall apply.

B/C 25.6.1

Sea/water temperature shall always be included in reports from sea stations, when data are available. [35.2.5]

B/C 25.7 Temperature, dew-point and wind data at pressure levels

Temperature, dew-point and wind data at pressure levels obtained during the radiosonde ascent shall be included in descending order with respect to pressure. Data at each pressure level shall be included only once. For example, if a significant level with respect to air temperature and relative humidity and a standard isobaric surface coincide, data for that level shall be included only once, the multiple attributes being indicated by Extended vertical sounding significance (Flag table 0 08 042) as specified in Regulation B/C 25.7.2.2.

Note:

(1) If data are produced and collected in traditional TEMP codes, the order of pressure levels may correspond to the order of levels in Parts A, B, C and D, when converted into BUFR or CREX. In this case, data at a level may be included more than once.

B/C 25.7.1 Number of reported pressure levels

The number of reported pressure levels shall be indicated by Extended delayed descriptor replication

factor 0 31 002 in BUFR and by a four-digit number in the Data Section corresponding to the position of the replication descriptor in the Data Description Section of CREX.

Notes:

(1) The number of pressure levels shall never be set to a missing value.

(2) The number of pressure levels shall be set to a positive value in a NIL report.

B/C 25.7.1.1

All required data from the entire radiosonde ascent shall be reported in a BUFR (or CREX) message that shall be produced when the sounding is completed. In interest of timely data delivery, however, a BUFR (or CREX) message should be sent when level 100 hPa is reached.

B/C 25.7.2 Temperature, dew-point and wind data at a pressure level <3 03 054>

B/C 25.7.2.1 Long time displacement (since launch time)

Long time displacement (0 04 086) represents the time offset from the launch time specified in Regulation 25.3, and shall be reported in seconds if available.

B/C 25.7.2.2 Extended vertical sounding significance – Flag table 0 08 042

This datum shall be used to specify vertical sounding significance in the following way:

(a) Bit No. 1 set to 1 indicates surface (see Regulation B/C 25.8.1).

(b) Bit No. 2 set to 1 indicates a standard level (see Regulation B/C 25.8.2).

(c) Bit No. 3 set to 1 indicates a tropopause level (see Regulation B/C 25.8.3).

(d) Bit No. 4 set to 1 indicates a maximum wind level (see Regulation B/C 25.8.4).

(e) Bit No. 5 set to 1 indicates a level significant with respect to temperature (see Regulation B/C 25.8.5).

(f) Bit No. 6 set to 1 indicates a level significant with respect to relative humidity (see Regulation B/C 25.8.6).

(g) Bit No. 7 set to 1 indicates a level significant with respect to wind (see Regulation B/C 25.8.7).

(h) Bit No. 8 set to 1 indicates beginning of missing temperature data and bit No. 9 set to 1 indicates end of missing temperature data (see Regulation B/C 25.8.8).

(i) Bit No. 10 set to 1 indicates beginning of missing humidity data and bit No. 11 set to 1 indicates end of missing humidity data (see Regulation B/C 25.8.9).

(j) Bit No. 12 set to 1 indicates beginning of missing wind data bit No. 13 set to 1 indicates end of missing wind data (see Regulation B/C 25.8.10).

(k) Bit No. 14 set to 1 indicates the top of wind sounding.

(l) Bit No. 15 set to 1 indicates a level determined by regional decision.

(m) All bits set to 0 indicate a level determined by national decision.

(n) All bits set to 1 indicate a missing value.

B/C 25.7.2.3 Pressure

Pressure (0 07 004) shall be reported in pascals (with precision in tens of a pascal).

B/C 25.7.2.4 Geopotential height

Geopotential height of the level (0 10 009) shall be reported in geopotential meters.

B/C 25.7.2.5 Radiosonde drift - latitude and longitude displacements

Latitude displacement (0 05 015) represents the latitude offset from the latitude of the launch site specified in Regulation 25.4, and shall be reported in degrees with precision in 10^{-5} of a degree if available. Longitude displacement 0 06 015 represents the longitude offset from the longitude of the launch site specified in Regulation 25.4, and shall be reported in degrees with precision in 10^{-5} of a degree if available.

B/C 25.7.2.6 Temperature

Temperature (0 12 101) shall be reported in degrees Kelvin (with precision in hundredths of a degree Kelvin); if produced in CREX, in degrees Celsius (with precision in hundredths of a degree Celsius). Temperature data shall be reported with precision in hundredths of a degree even if they are measured with the accuracy in tenths of a degree.

Notes:

(1) This requirement is based on the fact that conversion from the Kelvin to the Celsius scale has often resulted into distortion of the data values.

(2) Temperature t (in degrees Celsius) shall be converted into temperature T (in degrees Kelvin) using equation: T = t + 273.15.

B/C 25.7.2.7 Dew-point temperature

Dew-point temperature (0 12 103) shall be reported in degrees Kelvin (with precision in hundredths of a degree Kelvin); if produced in CREX, in degrees Celsius (with precision in hundredths of a degree Celsius).

Note:

(1) Notes (1) and (2) under Regulation B/C 25.7.2.6 shall apply.

B/C 25.7.2.7.1

Dew-point temperature data shall be derived using the function (or a near equivalent) for a relationship between saturation vapour pressure over water and air temperature (specified in publication WMO-No. 49 – *Technical Regulations*). Dew-point temperature data shall not be reported when the air temperature is outside the range stated by WMO for the application of the function; a lesser range may be used as a national practice. [35.3.1.1]

B/C 25.7.2.8 Wind direction and speed

The wind direction (0 11 001) shall be reported in degrees true and the wind speed (0 11 002) shall be reported in meters per second (with precision in tenths of a meter per second).

B/C 25.7.2.8.1

When during an ascent the pressure data can no longer be obtained, but wind data can be obtained, the wind data so obtained shall not be reported in the BUFR (or CREX) message in which data are described by the common sequence 3 09 052. These wind data so obtained may be reported using BUFR template TM 309051 suitable PILOT, PILOT SHIP or PILOT MOBIL data. [35.1.5]

B/C 25.7.2.8.2

Only wind data obtained from the radiosonde ascent by either visual or electronic means shall be included in the BUFR (or CREX) message in which data are described by the common sequence 3 09 052. Wind data obtained by means other than a radiosonde-type ascent shall not be included in a message under common sequence 3 09 052. [35.1.6]

B/C 25.8 Criteria for reporting standard and significant levels

B/C 25.8.1 Surface

The surface level shall be always reported.

Note:

(1) The value of Extended vertical sounding significance 0 08 042 at the surface level shall indicate that this level is also a level significant with respect to temperature, relative humidity and wind, i.e. not only bit No.1 but also bits No. 5, 6 and 7 shall be set to 1.

B/C 25.8.2 Standard levels

B/C 25.8.2.1

The standard levels of 1 000, 925, 850, 700, 500, 400, 300, 250, 200, 150, 100, 70, 50, 30, 20 and 10 hPa shall be reported in ascending order with respect to altitude. [35.2.2.1]

B/C 25.8.2.2

When the geopotential of a standard level is lower than the altitude of the reporting station, the time displacement, latitude displacement and longitude displacement for that level shall be set to zero and the air temperature, dew-point temperature and wind data for that level shall be reported as missing values. [35.2.2.2]

B/C 25.8.2.3

When air temperature, dew-point temperature or wind data at a standard level are not available, the corresponding entries for that level shall be reported as missing values.

B/C 25.8.2.4

Whenever it is desired to extrapolate a sounding for the computation of the geopotential at a standard level, the following rules shall apply:

(a) Extrapolation is permissible if, and only if, the pressure difference between the minimum pressure of the sounding and the isobaric surface for which the extrapolated value is being computed does not exceed one quarter of the pressure at which the extrapolated value is desired, provided the extrapolation does not extend through a pressure interval exceeding 25 hPa;

(b) For the purpose of geopotential calculation, and for this purpose only, the sounding will be extrapolated, using two points only of the sounding curve on a T-log p diagram, namely that at the minimum pressure reached by the sounding and that at the pressure given by the sum of this minimum pressure and the pressure difference, mentioned in (a) above. [35.2.2.4]

B/C 25.8.3 Tropopause level(s)

B/C 25.8.3.1

When a tropopause (one or more) is observed, the corresponding number of levels shall be included (indicated by 0 08 042 - bit No. 3 set to 1).

Note:

(1) For a definition of tropopause, see publication WMO-No. 100 – *Guide to Climatological Practices.* [35.2.3.1]

B/C 25.8.3.2

When no tropopause data are observed, no level shall be indicated by bit No. 3 of 0 08 042 set to 1. [35.2.3.2]

B/C 25.8.4 Maximum wind level(s)

B/C 25.8.4.1

When a maximum wind level (one or more) is reported, the corresponding number of levels shall be included in the report indicated by 0 08 042 - bit No. 4 set to 1.

Notes:

(1) Criteria for determining maximum wind levels are given in Regulations B/C 25.8.4.3 and B/C 25.8.4.4 below. [35.2.4.1]

(2) As a maximum wind level is also a level significant with respect to wind, bit No. 7 as well as bit No. 4 shall be set to 1 in the Extended vertical sounding significance 0 08 042.

B/C 25.8.4.2

When no maximum wind level is observed, no level shall be indicated by bit No. 4 of 0 08 042 set to 1. [35.2.4.2]

B/C 25.8.4.3

A maximum wind level:

(a) Shall be determined by consideration of the list of significant levels for wind speed, as obtained by means of the relevant recommended or equivalent national method (see Note under Regulation B/C 25.8.7.2) and *not* by consideration of the original wind-speed curve;

(b) Shall be located above the 500-hPa isobaric surface and shall correspond to a speed of more than 30 meters per second.

Note:

(1) A maximum wind level is defined as a level at which the wind speed is greater than that observed immediately above and below that level. [35.2.4.1], [32.2.3.1]

B/C 25.8.4.4

Whenever more than one maximum wind level exists, these levels shall be reported as follows:

(a) The level of greatest maximum wind speed shall be always included;

(b) The other levels shall be included in the report only if their speed exceeds those of the two adjacent minima by at least 10 meters per second;

(c) Furthermore, the highest level attained by the sounding shall be indicated as a maximum wind level, provided:

(i) It satisfies the criteria set forth in Regulation B/C 25.8.4.3 above;

(ii) It constitutes the level of the greatest speed of the whole sounding. [35.2.4.1], [32.2.3.2]

B/C 25.8.4.5

If the top of the wind sounding corresponds to the highest wind speed observed throughout the ascent, this level shall be indicated by 0 08 042 - bit No. 4 set to 1 (maximum wind level), bit No. 7 set to 1 (level significant with respect to wind) and bit No. 14 set to 1 (top of wind sounding).

Note:

(1) For the purpose of the above regulation, the “top of the wind sounding” is to be understood as the highest level for which wind data are available. [35.2.4.3]

B/C 25.8.5 Levels significant with respect to temperature

B/C 25.8.5.1

The reported significant levels *alone* shall make it possible to reconstruct the air temperature profile within the limits of the criteria specified.

If the criteria for determination of significant levels with respect to air temperature are satisfied at a particular point of altitude, data for all variables (if available) shall be reported for that level. [35.3.1.1]

B/C 25.8.5.2

The following shall be included as "mandatory" significant temperature levels:

(a) Surface level and the highest level of the sounding;

(b) A level between 110 and 100 hPa;

(c) Bases and tops of inversions and isothermal layers which are at least 20 hPa thick, provided that the base of the layer occurs below the 300-hPa level or the first tropopause, whichever is the higher;

(d) Bases and tops of inversion layers which are characterized by a change in temperature of at least 2.5ºC, provided that the base of the layer occurs below the 300-hPa level or the first tropopause, whichever is the higher.

Note:

(1) The inversion layers of (c) and (d) may be comprised of several thinner inversion layers separated by thin layers of temperature lapse. To allow for this situation, the tops of the inversion layers of (c) and (d) shall each be at a level such that no further inversion layers, whether thick or thin, shall occur for at least 20 hPa above the level. [35.3.1.2]

B/C 25.8.5.3

The following shall be included as "additional" significant levels. They shall be selected in the order given, thereby giving priority to representing the temperature profile. As far as possible, these additional levels shall be the actual levels at which prominent changes in the lapse rate of air temperature occur:

(a) Levels which are necessary to ensure that the temperature obtained by linear interpolation (on a T-log P or essentially similar diagram) between adjacent significant levels shall not depart from the observed temperature by more than 1ºC below the first significant level reported above the 300-hPa level or the first tropopause, whichever level is the lower, or by more than 2ºC thereafter;

(b) Levels which are necessary to limit the interpolation error on diagrams other than T-log P. These levels shall be such that the pressure at one significant level divided by the pressure of the preceding significant layer shall exceed 0.6 for levels up to the first tropopause and shall be determined by use of the method for selecting additional levels but with application of tighter criteria. [35.3.1.3]

B/C 25.8.5.4

When a significant level with respect to air temperature and a standard level coincide, data for that level shall be reported only once.

B/C 25.8.6 Levels significant with respect to relative humidity

B/C 25.8.6.1

The reported significant levels *alone* shall make it possible to reconstruct the relative humidity profiles within the limits of the criteria specified.

If the criteria for determination of significant levels with respect to relative humidity are satisfied at a particular point of altitude, data for all variables (if available) shall be reported for that level. [35.3.1.1]

B/C 25.8.6.2

The following shall be included as "mandatory" significant humidity levels:

(a) Surface level and the highest level of the sounding;

(b) A level between 110 and 100 hPa;

(c) Bases and tops of inversions and isothermal layers which are at least 20 hPa thick, provided that the base of the layer occurs below the 300-hPa level or the first tropopause, whichever is the higher;

(d) Bases and tops of inversion layers which are characterized by a change in relative humidity of at least 20 per cent, provided that the base of the layer occurs below the 300-hPa level or the first tropopause, whichever is the higher.

Note:

Note (1) under Regulation B/C 25.8.5.2 shall apply. [35.3.1.2]

B/C 25.8.6.3

The following shall be included as "additional" significant levels. They shall be selected in the order given, thereby giving priority to representing the temperature profile. As far as possible, these additional levels shall be the actual levels at which prominent changes in the lapse rate of air temperature occur:

(a) Levels which are necessary to ensure that the relative humidity obtained by linear interpolation between adjacent significant levels shall not depart by more than 15 per cent from the observed values. (The criterion of 15 per cent refers to an amount of relative humidity and NOT to the percentage of the observed value, e.g. if an observed value is 50 per cent, the interpolated value shall lie between 35 per cent and 65 per cent.);

(b) Levels which are necessary to limit the interpolation error on diagrams other than T-log P. These levels shall be such that the pressure at one significant level divided by the pressure of the preceding significant layer shall exceed 0.6 for levels up to the first tropopause and shall be determined by use of the method for selecting additional levels but with application of tighter criteria. [35.3.1.3]

B/C 25.8.6.4

When a significant layer with respect to relative humidity and a standard level coincide, data for that level shall be reported only once.

B/C 25.8.7 Levels significant with respect to wind

B/C 25.8.7.1

Significant wind levels shall be chosen so that the data from them *alone* shall make it possible to reconstruct the wind profile with sufficient accuracy for practical use. [35.3.2.1]

If the criteria for determination of significant levels with respect to wind speed and direction are satisfied at a particular point of altitude, data for all variables (if available) shall be reported for that level.

B/C 25.8.7.2

Criteria for determining significant levels with respect to changes in wind speed and direction:

(a) The direction of speed curves (in function of the log of pressure or altitude) can be reproduced with their prominent characteristics;

(b) These curves can be reproduced with the accuracy of at least 10 for direction and five meters per second for speed;

Note:

To satisfy these criteria, the following method of successive approximations is recommended, but other methods of attaining equivalent results may suit some national practices better and may be used:

(i) The surface level and highest level for which wind data are available constitute the first and the last significant levels.

The deviation from the linearly interpolated values between these two levels is then considered. If no direction deviates by more than 10 and no speed by more than five meters per second, no other significant level need be reported. Whenever one parameter deviates by more than the limit specified in paragraph (b) above the level of greatest deviation becomes a supplementary significant level for both parameters.

(ii) The additional significant levels so introduced divide the sounding into two layers. In each separate layer, the deviation from the linearly interpolated values between the base and the top are then considered. The process used in paragraph (i) above is repeated and yields other significant levels. These additional levels in turn modify the layer distribution, and the method is applied again until any level is approximated to the above-mentioned specified values. [35.3.2.1], [32.3.1.1]

B/C 25.8.8 Beginning and end of missing temperature data

B/C 25.8.8.1

A layer for which temperature data are missing shall be indicated by reporting the boundary levels of the layer, provided that the layer is at least 20 hPa thick. The boundary levels are the levels closest to the bottom and the top of the layer for which temperature data are available. The boundary levels are not required to meet "significant temperature level" criteria. [35.3.1.6]

B/C 25.8.9 Beginning and end of missing humidity data

B/C 25.8.9.1

A layer for which dew-point temperature data are missing shall be indicated by reporting the boundary levels of the layer, provided that the layer is at least 20 hPa thick. The boundary levels are the levels closest to the bottom and the top of the layer for which dew-point temperature data are available. The boundary levels are not required to meet "significant humidity level" criteria. [35.3.1.6]

B/C 25.8.10 Beginning and end of missing wind data

B/C 25.8.10.1

A layer for which wind data are missing shall be indicated by reporting the boundary levels of the layer, provided that the layer is at least 50 hPa thick. The boundary levels are the levels closest to the bottom and the top of the layer for which the observed data are available. The boundary levels are not required to meet "significant wind level" criteria. [35.3.2.2]

B/C 25.9 Wind shear data

B/C 25.9.1 Number and order of levels for which wind shear is reported

B/C 25.9.1.1

The number of levels with wind shear data shall be indicated by Delayed descriptor replication factor 0 31 001 in BUFR and by a four-digit number in the Data Section corresponding to the position of the replication descriptor in the Data Description Section of CREX.

Notes:

(1) The number of levels with wind shear data shall never be set to a missing value.

(2) The number of levels with wind shear data shall be set to a positive value in a NIL report.

(3) The number of levels with wind shear data shall be set to zero if data for vertical wind shear are not computed and required. [35.2.4.4]

B/C 25.9.1.2

Whenever wind shear data are reported for more than one level, these maximum wind levels shall be included in the same order as in the sequence <3 03 054>, i.e. in descending order with respect to pressure.

B/C 25.9.2 Wind shear data at a pressure level <3 03 051>

B/C 25.9.2.1 Long time displacement (since launch time)

Long time displacement (0 04 086) represents the time offset from the launch time specified in Regulation 25.3, and shall be reported in seconds if available.

B/C 25.9.2.2 Extended vertical sounding significance – Flag table 0 08 042

A level, for which wind shear data are reported, shall be indicated by vertical sounding significance 0 08 042 - bit No. 4 set to 1 (maximum wind level) and by bit No. 7 set to 1 (level significant with respect to wind). Moreover, if the top of the wind sounding corresponds to the highest wind speed observed throughout the ascent, this level shall be indicated also by bit No. 14 set to 1 (top of wind sounding).

B/C 25.9.2.3 Pressure

Pressure (0 07 004) shall be reported in pascals with precision in tens of a pascal.

B/C 25.9.2.4 Latitude and longitude displacements

Latitude displacement (0 05 015) represents the latitude offset from the latitude of the launch site specified in Regulation 25.4, and shall be reported in degrees with precision in 10^{-5} of a degree if available. Longitude displacement 0 06 015 represents the longitude offset from the longitude of the launch site specified in Regulation 25.4, and shall be reported in degrees with precision in 10^{-5} of a degree if available.

B/C 25.9.2.5 Wind shear data

Absolute wind shear in 1 km layer below (0 11 061) and absolute wind shear in 1 km layer above (0 11 062) shall be reported in meters per second (with precision in tenths of a meter per second), if data for vertical wind shear are computed and required. [35.2.4.4]

B/C 25.10 Data required by regional or national reporting practices

If regional or national reporting practices require inclusion of temperature, humidity and/or wind data at additional levels, these data shall be reported using sequence <3 03 054> for Temperature, dew-point, wind at a pressure level. Regulation B/C 25.7 shall apply.

Notes:

(1) A level determined by regional decision shall be indicated by Extended vertical sounding significance 0 08 042 - bit No. 15 set to 1.

(2) A level determined by national decision shall be indicated by Extended vertical sounding significance 0 08 042 – all bits set to 0.

B/C 25.10.1 Additional data required by reporting practices in RA I

Temperature, dew-point, wind data at additional levels shall be reported in compliance with Regulation B/C 25.10.

B/C 25.10.2 Additional data required by reporting practices in RA II

B/C 25.10.2.1

No additional data are required by regional reporting practices in RA II.

B/C 25.10.2.2

The inclusion of wind shear data shall be left to national decision. Members are recommended to include these data as often as possible. [2/35.2]

B/C 25.10.3 Additional data required by reporting practices in RA III

No regional requirements are indicated for reporting TEMP, TEMP SHIP and TEMP MOBIL data in RA III.

B/C 25.10.4 Additional data required by reporting practices in RA IV

B/C 25.10.4.1

When available, temperature, dew-point, wind data for levels 7, 5, 3, 2 and 1 hPa shall be reported in compliance with Regulation B/C 25.10. [4/35.2.1]

B/C 25.10.4.2

When required, additional information shall be reported using RA IV BUFR template for data representation of TEMP, TEMP SHIP and TEMP MOBIL data as shown in the Annex. [4/35.1] [4/35.2.2]

B/C 25.10.5 Additional data required by reporting practices in RA V

No regional requirements are indicated for reporting TEMP, TEMP SHIP and TEMP MOBIL data in RA V.

B/C 25.10.6 Additional data required by reporting practices in RA VI

B/C 25.10.6.1

The inclusion of wind shear data shall be left to national decision. Members are recommended to include these data as often as possible. [6/35.1]

B/C 25.10.6.2

Wind direction and speed shall be reported:

(i)For 900 or 1000 meters above the surface;

(ii)For 800 hPa level;

(iii)For 600 hPa level.

[6/35.2.2]

B/C 25.11 Other additional data

If additional information on sounding instrumentation is required, the sequence <3 09 052> for representation of TEMP, TEMP SHIP and TEMP MOBIL data may be supplemented by one or more additional parameters to allow data representation of this information. The list of such parameters is shown in Annex II, others may be added in compliance with the future requirements.

ANNEX I TO B/C25 – Regulations for reporting TEMP, TEMP SHIP and TEMP MOBIL data in TDCF

RA IV BUFR template for TEMP, TEMP SHIP and TEMP MOBIL data

The RA IV Regional coding procedures for TEMP and TEMP SHIP data require data representation of additional information that is specified in the *Manual on Codes*, WMO-No. 306, Volume II, by supplementary groups $101A_{df}A_{df}$ (code table 421 for $A_{df}A_{df}$ – Form of additional data reported). The sequence <3 09 052> for representation of TEMP, TEMP SHIP and TEMP MOBIL data is supplemented by additional parameters to allow

data representation of this information, if it is required.

3 09 052	**Sequence for representation of TEMP, TEMP SHIP and TEMP MOBIL observation type data**	
	Reason for no report or incomplete report	
0 35 035	Reason for termination	Code table
	Corrected data	
1 04 000	Delayed replication of 4 descriptors	
0 31 001	Delayed descriptor replication factor	Numeric
2 04 001	Add associated field of 1 bit in length	
0 31 021	Associated field significance = 21 (indicator of correction)	Code table
	Associated field set to 1 (corrected value)	
3 03 054	Temperature, dew-point, wind at a pressure level with radiosonde position	
2 04 000	Cancel Add associated field	
0 08 042	Extended vertical sounding significance = missing (to cancel the previous value)	Flag table
	Stability index and mean wind data	
0 13 047	Modified Showalter stability index	K
0 11 044	Mean wind direction for surface – 1500 m	Degree true
0 11 045	Mean wind speed for surface – 1500 m	m s^{-1}, scale 1
0 11 054	Mean wind direction for 1500 m – 3000 m	Degree true
0 11 055	Mean wind speed for 1500 m – 3000 m	m s^{-1}, scale 1
	Doubtful data	
1 12 000	Delayed replication of 12 descriptors	
0 31 001	Delayed descriptor replication factor	Numeric
1 11 002	Replicate next 11 descriptors 2 times	
0 04 086	Long time period or displacement (since launch time)	Second
0 08 040	Flight level significance In the 1st replication = 4 (Begin doubtful temperature, height data); In the 2nd replication = 9 (End doubtful temperature, height data).	Code table
0 07 004	Pressure	Pa, scale –1
0 05 015	Latitude displacement since launch site (high accuracy)	Degree, scale 5
0 06 015	Longitude displacement since launch site (high accuracy)	Degree, scale 5
1 01 000	Delayed replication of 1 descriptor	
0 31 000	Short delayed descriptor replication factor	Numeric
0 10 009	Geopotential height	gpm
1 01 000	Delayed replication of 1 descriptor	
0 31 000	Short delayed descriptor replication factor	Numeric
0 12 101	Temperature/dry-bulb temperature (scale 2)	K, scale 2
	Extrapolated geopotential data	
1 08 000	Delayed replication of 8 descriptors	
0 31 001	Delayed descriptor replication factor	Numeric
0 04 086	Long time period or displacement (since launch time)	Second
0 08 040	Flight level significance = 31 (Incremented height level (generated))	Code table
0 07 004	Pressure	Pa, scale –1
0 05 015	Latitude displacement since launch site (high accuracy)	Degree, scale 5
0 06 015	Longitude displacement since launch site (high accuracy)	Degree, scale 5

0 10 009	Geopotential height	gpm
0 11 001	Wind direction	Degree true
0 11 002	Wind speed	m s^{-1}, scale 1

Note:
The "Modified Showalter stability index" 0 13 047 is defined as the temperature difference between the ambient 500 hPa temperature and the temperature a parcel of air, initially at a selected base level, would have if brought from its condensation level to the 500 hPa surface by a moist adiabatic process. Positive values denote stable conditions, while negative values denote unstable conditions. The base level is 850 hPa, 800hPa or 750 hPa, if the station elevation is less than 1000, 1000 to 1400 or 1401 to 2000 gpm above mean sea level, respectively.

ANNEX II TO B/C25 – Regulations for reporting TEMP, TEMP SHIP and TEMP MOBIL data in TDCF

List of parameters for representation of additional information on sounding instrumentation

TABLE REFERENCE			ELEMENT NAME	UNIT, SCALE
0	01	081	Radiosonde serial number	CCITT IA5, 0
0	01	082	Radiosonde ascension number	Numeric, 0
0	02	067	Radiosonde operating frequency	Hz, -5
0	02	081	Type of balloon	Code table, 0
0	02	082	Weight of balloon	kg, 3
0	02	084	Type of gas used in balloon	Code table, 0
0	02	095	Type of pressure sensor	Code table, 0
0	02	096	Type of temperature sensor	Code table, 0
0	02	097	Type of humidity sensor	Code table, 0
0	25	061	Software identification and version number	CCITT IA5, 0
2	05	Y	Signify character (to allow insertion of Y characters as a data field of Y x 8 bits in length)	

B/C26 – Regulations for reporting TEMP DROP data in TDCF

TM 309053 - BUFR template for P, T, U and wind vertical profiles suitable for TEMP DROP observation data

3 09 053		**Sequence for representation TEMP DROP observation type data**
	3 01 112	Identification of launch point and instrumentation of dropsonde
	3 01 113	Date/time of launch
	3 01 114	Horizontal and vertical coordinates of launch site
	1 01 000	Delayed replication of 1 descriptor
	0 31 002	Extended delayed descriptor replication factor
	3 03 054	Temperature, dew-point and wind data at a pressure level
	1 01 000	Delayed replication of 1 descriptor
	0 31 001	Delayed descriptor replication factor
	3 03 051	Wind shear data at a pressure level

This BUFR template for P, T, U and wind profiles further expands as follows:

3 01 112		**Identification of launch point and instrumentation of dropsonde**	
	0 01 006	Aircraft identifier	CCITT IA5
	0 02 011	Radiosonde type	Code table
	0 02 013	Solar and infrared radiation correction	Code table
	0 02 014	Tracking technique/status of system used	Code table
	0 02 003	Type of measuring equipment used	Code table
3 01 113		**Date/time of launch**	
	0 08 021	Time significance (= 18 (launch time))	Code table
	3 01 011	Year	Year
		Month	Month
		Day	Day
	3 01 013	Hour	Hour
		Minute	Minute
		Second	Second
3 01 114		**Horizontal and vertical coordinates of launch site**	
	3 01 021	Latitude (high accuracy)	Degree, scale 5
		Longitude (high accuracy)	Degree, scale 5
	0 07 030	Height of station ground above mean sea level	m, scale 1
	0 07 031	Height of barometer above mean sea level	m, scale 1
	0 07 007	Height of release of sonde above mean sea level	m
	0 33 024	Station elevation quality mark	Code table
		Temperature, dew-point and wind data at pressure levels	
1 01 000		Delayed replication of 1 descriptor	
0 31 002		Extended delayed descriptor replication factor	Numeric
3 03 054		**Temperature, dew-point and wind data at a pressure level with radiosonde position**	
	0 04 086	Long time period or displacement (since launch time)	Second
	0 08 042	Extended vertical sounding significance	Flag table
	0 07 004	Pressure	Pa, scale –1
	0 10 009	Geopotential height	gpm
	0 05 015	Latitude displacement since launch site (high accuracy)	Degree, scale 5
	0 06 015	Longitude displacement since launch site (high accuracy)	Degree, scale 5
	0 12 101	Temperature/dry-bulb temperature (scale 2)	K, scale 2
	0 12 103	Dew-point temperature (scale 2)	K, scale 2
	0 11 001	Wind direction	Degree true
	0 11 002	Wind speed	m s^{-1}, scale 1
		Wind shear data	
1 01 000		Delayed replication of 1 descriptor	
0 31 001		Delayed descriptor replication factor	Numeric
3 03 051		**Wind shear data at a pressure level**	
	0 04 086	Long time period or displacement (since launch time)	Second
	0 08 042	Extended vertical sounding significance	Flag table
	0 07 004	Pressure	Pa, scale –1
	0 05 015	Latitude displacement since launch site (high accuracy)	Degree, scale 5
	0 06 015	Longitude displacement since launch site (high accuracy)	Degree, scale 5
	0 11 061	Absolute wind shear in 1 km layer below	m s^{-1}, scale 1
	0 11 062	Absolute wind shear in 1 km layer above	m s^{-1}, scale 1

Notes:
(1) Time of launch 3 01 013 shall be reported with the highest possible accuracy available. If the launch time is not available with second accuracy, the entry for seconds shall be put to zero.
(2) Long time displacement 0 04 086 represents the time offset from the launch time 3 01 013 (in seconds)
(3) Latitude displacement 0 05 015 represents the latitude offset from the latitude of the launch site. Longitude displacement 0 06 015 represents the longitude offset from the longitude of the launch site.

Regulations:

B/C 26.1 Section 1 of BUFR or CREX
B/C 26.2 Identification of launch point and instrumentation of dropsonde
B/C 26.3 Date/time of launch
B/C 26.4 Horizontal and vertical coordinates of launch site
B/C 26.5 Temperature, dew-point and wind data at pressure levels
B/C 26.6 Criteria for reporting standard and significant levels
B/C 26.7 Wind shear data
B/C 26.8 Data required by regional or national reporting practices

B/C 26.1 Section 1 of BUFR or CREX

B/C 26.1.1 Entries required in Section 1 of BUFR

The following entries shall be included in BUFR Section 1:
-BUFR master table,
-identification of originating/generating centre,
-identification of originating/generating sub-centre,
-update sequence number,
-identification of inclusion of optional section,
-data category (= 002 for all TEMP type data),
-international data sub-category [(1), (2)],
-local data subcategory,
-version number of master table,
-version number of local tables,
-year (year of the century up to BUFR edition 3),
-month (standard time),
-day (standard time = YY in the abbreviated telecommunication header for TEMP DROP type data),
-hour (standard time = GG in the abbreviated telecommunication header for TEMP DROP type data),
-minute (standard time = 00 for TEMP DROP type data).

Notes:
(1) Inclusion of this entry is required starting with BUFR edition 4.
(2) If required, the international data sub-category shall be included at all observation times as follows: = 007 for TEMP DROP data.

B/C 26.1.2 Entries required in Section 1 of CREX

The following entries shall be included in CREX Section 1:
-CREX master table,
-CREX edition number,
-CREX table version number,

-version number of BUFR master table (1),
-version number of local tables (1),
-data category (= 002 for all TEMP type data),
-international data sub-category (1), (2),
-identification of originating/generating centre (1),
-identification of originating/generating sub-centre (1),
-update sequence number (1),
-number of subsets (1),
-year (standard time) (1),
-month (standard time) (1),
-day (standard time = YY in the abbreviated telecommunication header for TEMP DROP type data) (1),
-hour (standard time = GG in the abbreviated telecommunication header for TEMP DROP type data) (1),
-minute (standard time = 00 for TEMP DROP type data) (1).

Notes:
(1) Inclusion of these entries is required starting with CREX edition 2.
(2) If inclusion of international data sub-category is required, Note (2) under B/C 26.1.1 applies.

B/C 26.2 Identification of launch point and instrumentation of dropsonde <3 01 112>

B/C 26.2.1 Identification of launch point of dropsonde

Aircraft identifier (0 01 006) shall be always reported.

B/C 26.2.1 Instrumentation for P, T, U and wind measurement

Radiosonde type (Code table 0 02 011), solar and infrared radiation correction (Code table 0 02 013), tracking techniques/status of system used (Code table 0 02 014) and type of measuring equipment used (Code table 0 02 003) shall be reported. [35.2.5]

B/C 26.3 Date/time of launch <3 01 113>

Time significance (0 08 021) shall be always set to 18 to indicate that the following entries specify the date and time of launching the dropsonde.

Date of launch <3 01 011> and time of launch <3 01 013> shall be reported, i.e. year (0 04 001), month (0 04 002), day (0 04 003)> and hour (0 04 004), minute (0 04 005) and second (0 04 006) of the actual time of launch shall be reported. [35.2.5]

Note:
(1) Time of launch <3 01 013> shall be reported with the highest possible accuracy available. If the launch time is not available with second accuracy, the entry 0 04 006 for seconds shall be set to zero.

B/C 26.4 Horizontal and vertical coordinates of launch site <3 01 114>

Latitude (0 05 001) and longitude (0 06 001) of the launch site shall be reported in degrees with precision in 10^{-5} of a degree.

Height of station ground above mean sea level (0 07 030) shall be reported as a missing value.

Height of barometer above mean sea level (0 07 031) shall be reported in meters with precision in tenths of a meter.

Height of release of dropsonde above mean sea level (0 07 007) shall be reported in meters.

Station elevation quality mark (Code table 0 33 024) shall be reported as a missing value. [35.2.1]

B/C 26.5 Temperature, dew-point and wind data at pressure levels

Temperature, dew-point and wind data at pressure levels obtained during the dropsonde descent shall be included in descending order with respect to pressure. Data at each pressure level shall be included only once. For example, if a significant level with respect to air temperature and relative humidity and a standard isobaric surface coincide, data for that level shall be included only once, the multiple attributes being indicated by Extended vertical sounding significance (Flag table 0 08 042) as specified in Regulation B/C 26.5.2.2.

Note:

(1) If data are produced and collected in traditional TEMP DROP code, the order of pressure levels may correspond to the order of levels in Parts A, B, C and D, when converted into BUFR or CREX. In this case, data at a level may be included more than once.

B/C 26.5.1 Number of reported pressure levels

The number of reported pressure levels shall be indicated by Extended delayed descriptor replication factor 0 31 002 in BUFR and by a four-digit number in the Data Section corresponding to the position of the replication descriptor in the Data Description Section of CREX.

Notes:

(1) The number of pressure levels shall never be set to a missing value.

(2) The number of pressure levels shall be set to a positive value in a NIL report.

B/C 26.5.2 Temperature, dew-point and wind data at a pressure level <3 03 054>

B/C 26.5.2.1 Long time displacement (since launch time)

Long time displacement (0 04 086) represents the time offset from the launch time specified in Regulation 26.3, and shall be reported in seconds if available.

B/C 26.5.2.2 Extended vertical sounding significance – Flag table 0 08 042

This datum shall be used to specify vertical sounding significance in the following way:

(a) Bit No. 1 set to 1 indicates a surface (see Regulation B/C 26.6.1)

(b) Bit No. 2 set to 1 indicates a standard level (see Regulation B/C 26.6.2).

(c) Bit No. 3 set to 1 indicates a tropopause level (see Regulation B/C 26.6.3).

(d) Bit No. 4 set to 1 indicates a maximum wind level (see Regulation B/C 26.6.4).
(e) Bit No. 5 set to 1 indicates a level significant with respect to temperature (see Regulation B/C 26.6.5).
(f) Bit No. 6 set to 1 indicates a level significant with respect to relative humidity (see Regulation B/C 26.6.6).
(g) Bit No. 7 set to 1 indicates a level significant with respect to wind (see Regulation B/C 26.6.7).
(h) Bit No. 8 set to 1 indicates beginning of missing temperature data and bit No. 9 set to 1 indicates end of missing temperature data (see Regulation B/C 26.6.8).
(i) Bit No. 10 set to 1 indicates beginning of missing humidity data and bit No. 11 set to 1 indicates end of missing humidity data (see Regulation B/C 26.6.9).
(j) Bit No. 12 set to 1 indicates beginning of missing wind data bit No. 13 set to 1 indicates end of missing wind data (see Regulation B/C 26.6.10).
(k) Bit No. 14 set to 1 indicates the top of wind sounding (the lowest level for which wind data are available).
(l) Bit No. 15 set to 1 indicates a level determined by regional decision.
(m) All bits set to 0 indicate a level determined by national decision.
(n) All bits set to 1 indicate a missing value.

B/C 26.5.2.3 Pressure

Pressure (0 07 004) shall be reported in pascals (with precision in tens of a pascal).

B/C 26.5.2.4 Geopotential height

Geopotential height of the level (0 10 009) shall be reported in geopotential meters.

B/C 26.5.2.5 Radiosonde drift - latitude and longitude displacements

Latitude displacement (0 05 015) represents the latitude offset from the latitude of the launch site specified in Regulation 26.4, and shall be reported in degrees with precision in 10^{-5} of a degree if available. Longitude displacement 0 06 015 represents the longitude offset from the longitude of the launch site specified in Regulation 26.4, and shall be reported in degrees with precision in 10^{-5} of a degree if available.

B/C 26.5.2.6 Temperature

Temperature (0 12 101) shall be reported in degrees Kelvin (with precision in hundredths of a degree Kelvin); if produced in CREX, in degrees Celsius (with precision in hundredths of a degree Celsius). Temperature data shall be reported with precision in hundredths of a degree even if they are measured with the accuracy in tenths of a degree.

Notes:

(1) This requirement is based on the fact that conversion from the Kelvin to the Celsius scale has often resulted into distortion of the data values.
(2) Temperature t (in degrees Celsius) shall be converted into temperature T (in degrees Kelvin) using equation: $T = t + 273.15$.

B/C 26.5.2.7 Dew-point temperature

Dew-point temperature (0 12 103) shall be reported in degrees Kelvin (with precision in hundredths of

a degree Kelvin); if produced in CREX, in degrees Celsius (with precision in hundredths of a degree Celsius).

Note:

(1) Notes (1) and (2) under Regulation B/C 26.5.2.6 shall apply.

B/C 26.5.2.7.1

Dew-point temperature data shall be derived using the function (or a near equivalent) for a relationship between saturation vapour pressure over water and air temperature (specified in publication WMO-No. 49 – *Technical Regulations*). Dew-point temperature data shall not be reported when the air temperature is outside the range stated by WMO for the application of the function; a lesser range may be used as a national practice. [35.3.1.1]

B/C 26.5.2.8 Wind direction and speed

The wind direction (0 11 001) shall be reported in degrees true and the wind speed (0 11 002) shall be reported in meters per second (with precision in tenths of a meter per second).

B/C 26.5.2.8.1

Only wind data obtained from the radiosonde descent by electronic means shall be included in the BUFR (or CREX) message in which data are described by the common sequence 3 09 053. Wind data obtained by means other than a radiosonde-type descent shall not be included in a message under common sequence 3 09 053. [35.1.7]

B/C 26.6 Criteria for reporting standard and significant levels

B/C 26.6.1 Surface level

If extrapolated surface data are included in the report, the level shall be indicated by bit No. 1 of 0 08 042 set to 1.

B/C 26.6.2 Standard levels

B/C 26.6.2.1

The standard levels of 1 000, 925, 850, 700, 500, 400, 300, 250, 200, 150, 100, 70, 50, 30, 20 and 10 hPa shall be reported in descending order with respect to pressure. [35.2.2.1]

B/C 26.6.2.2

When air temperature, dew-point temperature or wind data at a standard level are not available, the corresponding entries for that level shall be reported as missing values.

B/C 26.6.2.3

Whenever it is desired to extrapolate a sounding for the computation of the geopotential at a standard level, the following rules shall apply:

(a) Extrapolation is permissible if, and only if, the pressure difference between the minimum pressure of the sounding and the isobaric surface for which the extrapolated value is being computed does not exceed one quarter of the pressure at which the extrapolated value is desired, provided the extrapolation does not extend through a pressure interval exceeding 25 hPa;

(b) For the purpose of geopotential calculation, and for this purpose only, the sounding will be extrapolated, using two points only of the sounding curve on a T-log p diagram, namely that at the minimum pressure reached by the sounding and that at the pressure given by the sum of this minimum pressure and the pressure difference, mentioned in (a) above. [35.2.2.4]

B/C 26.6.3 Tropopause level(s)

B/C 26.6.3.1

When a tropopause (one or more) is observed, the corresponding number of levels shall be included (indicated by 0 08 042 - bit No. 3 set to 1).

Note:

(1) For a definition of tropopause, see publication WMO-No. 100 – *Guide to Climatological Practices.* [35.2.3.1]

B/C 26.6.3.2

When no tropopause data are observed, no level shall be indicated by bit No. 3 of 0 08 042 set to 1. [35.2.3.2]

B/C 26.6.4 Maximum wind level(s)

B/C 26.6.4.1

When a maximum wind level (one or more) is reported, the corresponding number of levels shall be included in the report indicated by 0 08 042 - bit No. 4 set to 1.

Notes:

(1) Criteria for determining maximum wind levels are given in Regulations B/C 26.6.4.3 and B/C 26.6.4.4 below. [35.2.4.1]

(2) As a maximum wind level is also a level significant with respect to wind, bit No. 7 as well as bit No. 4 shall be set to 1 in the Extended vertical sounding significance 0 08 042.

B/C 26.6.4.2

When no maximum wind level is observed, no level shall be indicated by bit No. 4 of 0 08 042 set to 1. [35.2.4.2]

B/C 26.6.4.3

A maximum wind level:

(a) Shall be determined by consideration of the list of significant levels for wind speed, as obtained by means of the relevant recommended or equivalent national method (see Note under Regulation B/C 26.6.7.2) and *not* by consideration of the original wind-speed curve;

(b) Shall be located above the 500-hPa isobaric surface and shall correspond to a speed of more than 30 meters per second.

Note:

(1) A maximum wind level is defined as a level at which the wind speed is greater than that observed immediately above and below that level. [35.2.4.1] [32.2.3.1]

B/C 26.6.4.4

Whenever more than one maximum wind level exists, these levels shall be reported as follows:

(a) The level of greatest maximum wind speed shall be always included;

(b) The other levels shall be included in the report only if their speed exceeds those of the two adjacent minima by at least 10 meters per second. [35.2.4.1] [32.2.3.2]

B/C 26.6.4.5

If the top of the wind sounding corresponds to the highest wind speed observed throughout the descent, this level shall be indicated by 0 08 042 - bit No. 4 set to 1 (maximum wind level), bit No. 7 set to 1 (level significant with respect to wind) and bit No. 14 set to 1 (top of wind sounding).

Notes:

(1) For the purpose of the above regulation, the “top of the wind sounding” is to be understood as the lowest level (termination level of the sounding) for which wind data are available. [35.2.4.3]

(2) Although not very probable, the situation described in the above regulation cannot be excluded.

B/C 26.6.5 Levels significant with respect to temperature

B/C 26.6.5.1

The reported significant levels *alone* shall make it possible to reconstruct the air temperature profile within the limits of the criteria specified.

If the criteria for determination of significant levels with respect to air temperature are satisfied at a particular point of altitude, data for all variables (if available) shall be reported for that level. [35.3.1.1]

B/C 26.6.5.2

The following shall be included as "mandatory" significant temperature levels:

(a) Aircraft reference level and termination level of the sounding (the lowest level of the sounding);

(b) A level between 110 and 100 hPa;

(c) Bases and tops of inversions and isothermal layers which are at least 20 hPa thick, provided that the base of the layer occurs below the 300-hPa level or the first tropopause, whichever is the higher;

(d) Bases and tops of inversion layers which are characterized by a change in temperature of at least 2.5ºC, provided that the base of the layer occurs below the 300-hPa level or the first tropopause, whichever is the higher.

Note:

(1) The inversion layers of (c) and (d) may be comprised of several thinner inversion layers separated by thin layers of temperature lapse. To allow for this situation, the tops of the inversion layers of (c) and (d) shall each be at a level such that no further inversion layers, whether thick or thin, shall occur for at least 20 hPa above the level. [35.3.1.2]

B/C 26.6.5.3

The following shall be included as "additional" significant levels. They shall be selected in the order given, thereby giving priority to representing the temperature profile. As far as possible, these additional levels shall be the actual levels at which prominent changes in the lapse rate of air temperature occur:

(a) Levels which are necessary to ensure that the temperature obtained by linear interpolation (on a T-log P or essentially similar diagram) between adjacent significant levels shall not depart from the observed temperature by more than 1ºC below the first significant level reported above the 300-hPa level or the first tropopause, whichever level is the lower, or by more than 2ºC thereafter;

(b) Levels which are necessary to limit the interpolation error on diagrams other than T-log P. These levels shall be such that the pressure at one significant level divided by the pressure of the preceding significant layer shall exceed 0.6 for levels up to the first tropopause and shall be determined by use of the method for selecting additional levels but with application of tighter criteria. [35.3.1.3]

B/C 26.6.5.4

When a significant level with respect to air temperature and a standard level coincide, data for that level shall be reported only once.

B/C 26.6.6 Levels significant with respect to relative humidity

B/C 26.6.6.1

The reported significant levels *alone* shall make it possible to reconstruct the relative humidity profiles within the limits of the criteria specified.

If the criteria for determination of significant levels with respect to relative humidity are satisfied at a particular point of altitude, data for all variables (if available) shall be reported for that level. [35.3.1.1]

B/C 26.6.6.2

The following shall be included as "mandatory" significant humidity levels:

(a) Aircraft reference level and termination level of the sounding (the lowest level of the sounding);

(b) A level between 110 and 100 hPa;

(c) Bases and tops of inversions and isothermal layers which are at least 20 hPa thick, provided that the base of the layer occurs below the 300-hPa level or the first tropopause, whichever is the higher;

(d) Bases and tops of inversion layers which are characterized by a change in relative humidity of at least 20 per cent, provided that the base of the layer occurs below the 300-hPa level or the first tropopause, whichever is the higher.

Note:

Note (1) under Regulation B/C 26.6.5.2 shall apply. [35.3.1.2]

B/C 26.6.6.3

The following shall be included as "additional" significant levels. They shall be selected in the order given, thereby giving priority to representing the temperature profile. As far as possible, these additional levels shall be the actual levels at which prominent changes in the lapse rate of air temperature occur:

(a) Levels which are necessary to ensure that the relative humidity obtained by linear interpolation between adjacent significant levels shall not depart by more than 15 per cent from the observed values. (The criterion of 15 per cent refers to an amount of relative humidity and NOT to the percentage of the observed value, e.g. if an observed value is 50 per cent, the interpolated value shall lie between 35 per cent and 65 per cent.);

(b) Levels which are necessary to limit the interpolation error on diagrams other than T-log P. These levels shall be such that the pressure at one significant level divided by the pressure of the preceding significant layer shall exceed 0.6 for levels up to the first tropopause and shall be determined by use of the method for selecting additional levels but with application of tighter criteria. [35.3.1.3]

B/C 26.6.6.4

When a significant layer with respect to relative humidity and a standard level coincide, data for that level shall be reported only once.

B/C 26.6.7 Levels significant with respect to wind

B/C 26.6.7.1

Significant wind levels shall be chosen so that the data from them *alone* shall make it possible to reconstruct the wind profile with sufficient accuracy for practical use. [35.3.2.1]

If the criteria for determination of significant levels with respect to wind speed and direction are satisfied at a particular point of altitude, data for all variables (if available) shall be reported for that level.

B/C 26.6.7.2

Criteria for determining significant levels with respect to changes in wind speed and direction:

(a) The direction of speed curves (in function of the log of pressure or altitude) can be reproduced with their prominent characteristics;

(b) These curves can be reproduced with the accuracy of at least 10 for direction and five meters per second for speed.

Note:

To satisfy these criteria, the following method of successive approximations is recommended, but other methods of attaining equivalent results may suit some national practices better and may be used:

(ii) The lowest level for which wind data are available and the aircraft reference level constitute the first and the last significant levels.
The deviation from the linearly interpolated values between these two levels is then considered. If no direction deviates by more than 10 and no speed by more than five meters per second, no other significant level need be reported. Whenever one parameter deviates by more than the limit specified in paragraph (b) above the level of greatest deviation becomes a supplementary significant level for both parameters.

(ii) The additional significant levels so introduced divide the sounding into two layers. In each separate layer, the deviation from the linearly interpolated values between the base and the top are then considered. The process used in paragraph (i) above is repeated and yields other significant levels. These additional levels in turn modify the layer distribution, and the method is applied again until any level is approximated to the above-mentioned specified values. [35.3.2.1] [32.3.1.1]

B/C 26.6.8 Beginning and end of missing temperature data

B/C 26.6.8.1

A layer for which temperature data are missing shall be indicated by reporting the boundary levels of the layer, provided that the layer is at least 20 hPa thick. The boundary levels are the levels closest to the bottom (beginning of the missing data) and the top (end of the missing data) of the layer for which temperature data are available. The boundary levels are not required to meet “significant temperature level” criteria. [35.3.1.6]

B/C 26.6.9 Beginning and end of missing humidity data

B/C 26.6.9.1

A layer for which dew-point temperature data are missing shall be indicated by reporting the boundary levels of the layer, provided that the layer is at least 20 hPa thick. The boundary levels are the levels closest to the bottom (beginning of the missing data) and the top (end of the missing data) of the layer for which dew-point temperature data are available. The boundary levels are not required to meet “significant humidity level” criteria. [35.3.1.6]

B/C 26.6.10 Beginning and end of missing wind data

B/C 26.6.10.1

A layer for which wind data are missing shall be indicated by reporting the boundary levels of the layer, provided that the layer is at least 50 hPa thick. The boundary levels are the levels closest to the bottom (beginning of the missing data) and the top (end of the missing data) of the layer for which the observed data are available. The boundary levels are not required to meet “significant wind level” criteria. [35.3.2.2]

B/C 26.7 Wind shear data

B/C 26.7.1 Number and order of levels for which wind shear is reported

B/C 26.7.1.1

The number of levels with wind shear data shall be indicated by Delayed descriptor replication factor 0 31 001 in BUFR and by a four-digit number in the Data Section corresponding to the position of the replication descriptor in the Data Description Section of CREX.

Notes:

(1) The number of levels with wind shear data shall never be set to a missing value.
(2) The number of levels with wind shear data shall be set to a positive value in a NIL report.
(3) The number of levels with wind shear data shall be set to zero if data for vertical wind shear are not computed and required. [35.2.4.4]

B/C 26.7.1.2

Whenever wind shear data are reported for more than one level, these maximum wind levels shall be included in the same order as in the sequence <3 03 054>, i.e. in descending order with respect to pressure.

B/C 26.7.2 Wind shear data at a pressure level <3 03 051>

B/C 26.7.2.1 Long time displacement (since launch time)

Long time displacement (0 04 086) represents the time offset from the launch time specified in Regulation 26.3, and shall be reported in seconds if available.

B/C 26.7.2.2 Extended vertical sounding significance – Flag table 0 08 042

A level, for which wind shear data are reported, shall be indicated by vertical sounding significance 0 08 042 - bit No. 4 set to 1 (maximum wind level) and by bit No. 7 set to 1 (level significant with respect to wind).

B/C 26.7.2.3 Pressure

Pressure (0 07 004) shall be reported in pascals with precision in tens of a pascal.

B/C 26.7.2.4 Latitude and longitude displacements

Latitude displacement (0 05 015) represents the latitude offset from the latitude of the launch site specified in Regulation 26.4, and shall be reported in degrees with precision in 10^{-5} of a degree if available. Longitude displacement 0 06 015 represents the longitude offset from the longitude of the launch site specified in Regulation 26.4, and shall be reported in degrees with precision in 10^{-5} of a degree if available.

B/C 26.7.2.5 Wind shear data

Absolute wind shear in 1 km layer below (0 11 061) and absolute wind shear in 1 km layer above (0 11 062) shall be reported in meters per second (with precision in tenths of a meter per second), if data for vertical wind shear are computed and required. [35.2.4.4]

B/C 26.8 Data required by regional or national reporting practices

If regional or national reporting practices require inclusion of temperature, humidity and/or wind data at additional levels, these data shall be reported using sequence <3 03 054> for Temperature, dew-point, wind at a pressure level. Regulation B/C 26.5 shall apply.

Notes:

(1) A level determined by regional decision shall be indicated by Extended vertical sounding significance 0 08 042 - bit No. 15 set to 1.

(2) A level determined by national decision shall be indicated by Extended vertical sounding significance 0 08 042 – all bits set to 0.

B/C 26.8.1 Additional data required by reporting practices

No regional requirements are indicated for reporting TEMP DROP data in the *Manual on Codes*, WMO-No. 306, Volume II.

B/C30 – Regulations for reporting CLIMAT data in TDCF

TM 307073 - BUFR template for reports of monthly values from a land station suitable for CLIMAT data

3 07 073		**Sequence for representation of monthly values suitable for CLIMAT data**
	3 07 071	Monthly values from a land station
	3 07 072	Monthly normals for a land station

Monthly values from a land station (data of CLIMAT Sections 0, 1, 3 and 4) Sequence BUFR descriptor **<3 07 071>** expands as shown in the leftmost column below.				
3 01 090			**Fixed surface station identification, time, horizontal and vertical coordinates**	Unit, scale
	3 01 004		Surface station identification	
		0 01 001	WMO block number	Numeric,0
		0 01 002	WMO station number	Numeric,0
		0 01 015	Station or site name	CCITT IA5, 0
		0 02 001	Type of station	Code table, 0
	3 01 011	0 04 001	Year(1)	Year, 0
		0 04 002	Month(1)	Month, 0
		0 04 003	Day (= 1) (1)	Day, 0
	3 01 012	0 04 004	Hour (= 0) (1)	Hour, 0
		0 04 005	Minute (= 0) (1)	Minute, 0
	3 01 021	0 05 001	Latitude (high accuracy)	Degree, 5
		0 06 001	Longitude (high accuracy)	Degree, 5
	0 07 030		Height of station ground above msl	m, 1
	0 07 031		Height of barometer above msl	m, 1
			Monthly mean values of pressure, temperature, extreme temperatures and vapour pressure	
0 04 074			Short time displacement (= UTC - LST) (1)	Hour, 0
0 04 023			Time period (= number of days in the month)	Day, 0
0 08 023			First order statistics (= 4; mean value)	Code table, 0
0 10 004			Pressure $\overline{\mathbf{P_oP_oP_oP_o}}$	Pa, –1
0 10 051			Pressure reduced to msl $\overline{\mathbf{PPPP}}$	Pa, –1
0 07 004			Pressure (standard level) (for lowland stations = missing value)	Pa, –1
0 10 009			Geopotential height of the standard level $\overline{\mathbf{PPPP}}$ (for lowland stations = missing value)	gpm, 0

0 07 032			Height of sensor above local ground (3)	m, 2
0 12 101			Temperature/dry-bulb temperature $\mathbf{s_n\overline{TTT}}$	K, 2
0 02 051			Indicator to specify observing method for extreme temperatures (3) $\mathbf{i_y}$	Code table, 0
0 04 051			Principal time of daily reading of maximum temperature $\mathbf{G_xG_x}$	Hour, 0
0 12 118			Maximum temperature at height specified, past 24 hours $\mathbf{s_nT_xT_xT_x}$	K, 2
0 04 052			Principal time of daily reading of minimum temperature $\mathbf{G_nG_n}$	Hour, 0
0 12 119			Minimum temperature at height specified, past 24 hours $\mathbf{s_nT_nT_nT_n}$	K, 2
0 13 004			Vapour pressure $\mathbf{\overline{eee}}$	Pa, -1
0 08 023			First order statistics (set to missing to cancel the previous value)	Code table, 0
0 12 151			Standard deviation of daily mean temperature $\mathbf{s_ts_ts_t}$	K, 2
0 07 032			Height of sensor above local ground (set to missing to cancel the previous value)	m, 2
			Number of days in the month for which values are missing	
1 02 005			Replicate 2 descriptors 5 times	
0 08 050			Qualifier for number of missing values in calculation of statistic (= 1; pressure) (= 2; temperature) (= 4; vapour pressure) (= 7; maximum temperature) (= 8; minimum temperature)	Code table, 0
0 08 020			Total number of missing entities (days) $\mathbf{m_pm_p}$ (for pressure) $\mathbf{m_Tm_T}$ (for temperature) $\mathbf{m_em_e}$ (for vapour pressure) $\mathbf{m_{Tx}}$ (for maximum temperature) $\mathbf{m_{Tn}}$ (for minimum temperature)	Numeric, 0
			Monthly duration of sunshine	
0 14 032			Total sunshine $\mathbf{S_1S_1S_1}$	Hour, 0
0 14 033			Total sunshine $\mathbf{p_sp_sp_s}$	%, 0
0 08 050			Qualifier for number of missing values in calculation of statistic (= 6; sunshine duration)	Code table, 0
0 08 020			Total number of missing entities (days) $\mathbf{m_Sm_S}$	Numeric, 0
			Number of days with parameters beyond certain thresholds; number of days with thunderstorm and hail	
1 02 018			Replicate 2 descriptors 18 times	
0 08 052			Conditions for which number of days of occurrence follows (= 0; wind $\geq$ 10 m s^{-1}) (= 1; wind $\geq$ 20 m s^{-1}) (= 2; wind $\geq$ 30 m s^{-1}) (= 3; max. T <273.15 K) (= 4; max. T $\geq$ 298.15 K) (= 5; max. T $\geq$ 303.15 K) (= 6; max. T $\geq$ 308.15 K) (= 7; max. T $\geq$ 313.15 K)	Code table, 0

			(= 8; min. T < 273.15 K) (= 16; sss > 0.00 m) (= 17; sss > 0.01 m) (= 18; sss > 0.10 m) (= 19; sss > 0.50 m) (= 20; horizontal visibility < 50 m) (= 21; horizontal visibility < 100 m) (= 22; horizontal visibility < 1000 m) (= 23; hail) (= 24; thunderstorm)	
0 08 022			Total number (of days) $\mathbf{f_{10}f_{10}}$ (wind ≥10 m s^{-1}) $\mathbf{f_{20}f_{20}}$ (wind ≥ 20 m s^{-1}) $\mathbf{f_{30}f_{30}}$ (wind ≥ 30 m s^{-1}) $\mathbf{T_{x0}T_{x0}}$ (T_x < 273.15 K) $\mathbf{T_{25}T_{25}}$ (T_x ≥ 298.15 K) $\mathbf{T_{30}T_{30}}$ (T_x ≥ 303.15 K) $\mathbf{T_{35}T_{35}}$ (T_x ≥ 308.15 K) $\mathbf{T_{40}T_{40}}$ (T_x ≥ 313.15 K) $\mathbf{T_{n0}T_{n0}}$ (T_n < 273.15 K) $\mathbf{s_0s_0}$ (sss > 0.00 m) $\mathbf{s_1s_1}$ (sss > 0.01 m) $\mathbf{s_{10}s_{10}}$ (sss > 0.10 m) $\mathbf{s_{50}s_{50}}$ (sss > 0.50 m) $\mathbf{V_1V_1}$ (h. viz. < 50 m) $\mathbf{V_2V_2}$ (h. viz. < 100 m) $\mathbf{V_3V_3}$ (h. viz. < 1000 m) $\mathbf{D_{gr}D_{gr}}$ (hail) $\mathbf{D_{ts}D_{ts}}$ (thunderstorm)	Numeric, 0
			Occurrence of extreme values of temperature and wind speed	
0 07 032			Height of sensor above local ground	m, 2
0 08 053			Day of occurrence qualifier (= 0; on 1 day only) (= 1; on 2 or more days)	Code table, 0
0 04 003			Day $\mathbf{y_xy_x}$	Day, 0
0 12 152			Highest daily mean temperature $\mathbf{s_nT_{xd}T_{xd}T_{xd}}$	K, scale 2
0 08 053			Day of occurrence qualifier (= 0; on 1 day only) (= 1; on 2 or more days)	Code table, 0
0 04 003			Day $\mathbf{y_ny_n}$	Day, 0
0 12 153			Lowest daily mean temperature $\mathbf{s_nT_{nd}T_{nd}T_{nd}}$	K, 2
0 08 053			Day of occurrence qualifier (= 0; on 1 day only) (= 1; on 2 or more days)	Code table, 0
0 04 003			Day $\mathbf{y_{ax}y_{ax}}$	Day, 0
0 08 023			First order statistics (= 2; maximum value)	Code table, 0
0 12 101			Temperature/dry-bulb temperature $\mathbf{s_nT_{ax}T_{ax}T_{ax}}$	K, scale 2
0 08 053			Day of occurrence qualifier (= 0; on 1 day only) (= 1; on 2 or more days)	Code table, 0
0 04 003			Day $\mathbf{y_{an}y_{an}}$	Day, 0
0 08 023			First order statistics (= 3; minimum value)	Code table, 0
0 12 101			Temperature/dry-bulb temperature $\mathbf{s_nT_{an}T_{an}T_{an}}$	K, 2
0 08 023			First order statistics (set to missing to cancel the previous value)	Code table, 0
0 07 032			Height of sensor above local ground	m, 2
0 02 002			Type of instrumentation for wind measurement	Flag table, 0
0 08 053			Day of occurrence qualifier (= 0; on 1 day only) (= 1; on 2 or more days)	Code table, 0

0 04 003			Day $\mathbf{y_{fx}y_{fx}}$	Day, 0
0 11 046			Maximum instantaneous wind speed $\mathbf{f_xf_xf_x}$	m s^{-1}, 1
0 08 053			Day of occurrence qualifier (set to missing to cancel the previous value)	Code table, 0
			Monthly precipitation data	
0 04 003			Day (= 1) (2)	Day, 0
0 04 004			Hour (= 6) (2)	Hour, 0
0 04 023			Time period (= number of days in the month) (2)	Day, 0
0 07 032			Height of sensor above local ground(3)	m, 2
0 13 060			Total accumulated precipitation $\mathbf{R_1R_1R_1R_1}$	kg m^{-2}, 1
0 13 051			Frequency group; precipitation $\mathbf{R_d}$	Code table, 0
0 04 053			Number of days with precipitation equal to or more than 1 mm $\mathbf{n_rn_r}$	Numeric, 0
0 08 050			Qualifier for number of missing values in calculation of statistic (= 5; precipitation)	Code table, 0
0 08 020			Total number of missing entities (days) $\mathbf{m_Rm_R}$ (for precipitation)	Numeric, 0
			Number of days with precipitation beyond Certain thresholds	
1 02 006			Replicate 2 descriptors 6 times	
0 08 052			Conditions for which number of days of occurrence follows (= 10; precipitation ≥ 1.0 kg m^{-2}) (= 11; precipitation ≥ 5.0 kg m^{-2}) (= 12; precipitation ≥ 10.0 kg m^{-2}) (= 13; precipitation ≥ 50.0 kg m^{-2}) (= 14; precipitation ≥ 100.0 kg m^{-2}) (= 15; precipitation ≥ 150.0 kg m^{-2})	Code table, 0
0 08 022			Total number (of days) $\mathbf{R_1R_1}$ (precipitation ≥ 1.0 kg m^{-2}) $\mathbf{R_5R_5}$ (precipitation ≥ 5.0 kg m^{-2}) $\mathbf{R_{10}R_{10}}$ (precipitation ≥ 10.0 kg m^{-2}) $\mathbf{R_{50}R_{50}}$ (precipitation ≥ 50.0 kg m^{-2}) $\mathbf{R_{100}R_{100}}$ (precipitation ≥ 100.0 kg m^{-2}) $\mathbf{R_{150}R_{150}}$ (precipitation ≥ 150.0 kg m^{-2})	Numeric, 0
			Occurrence of extreme precipitation	
0 08 053			Day of occurrence qualifier (= 0; on 1 day only) (= 1; on 2 or more days)	Code table, 0
0 04 003			Day $\mathbf{y_ry_r}$	Day, 0
0 13 052			Highest daily amount of precipitation $\mathbf{R_xR_xR_x}$	kg m^{-2}, 1
0 07 032			Height of sensor above local ground (set to missing to cancel the previous value)	m, 2
Monthly normals for a land station (data of CLIMAT Section 2) Sequence BUFR descriptor **<3 07 072>** expands as shown in the leftmost column below.				
			Normals of pressure, temperatures, vapour pressure, standard deviation of daily mean temperature, and sunshine duration	Unit, scale
0 04 001			Year (of beginning of the reference period)	Year, 0
0 04 001			Year (of ending of the reference period)	Year, 0
0 04 002			Month	Month, 0
0 04 003			Day (= 1) (1)	Day, 0
0 04 004			Hour (= 0) (1)	Hour, 0
0 04 074			Short time displacement (= UTC - LST) (1)	Hour, 0
0 04 022			Time period (= 1)	Month, 0
0 08 023			First order statistics (= 4; mean value)	Code table, 0

0 10 004			Pressure $\overline{\mathbf{P_oP_oP_oP_o}}$	Pa, –1
0 10 051			Pressure reduced to msl $\overline{\mathbf{PPPP}}$	Pa, –1
0 07 004			Pressure (standard level)	Pa, –1
0 10 009			Geopotential height of the standard level $\overline{\mathbf{PPPP}}$	Gpm
0 07 032			Height of sensor above local ground(3)	m, 2
0 12 101			Temperature/dry-bulb temperature $\mathbf{s_n\overline{TTT}}$	K, 2
0 02 051			Indicator to specify observing method for extreme temperatures(3) $\mathbf{i_y}$	Code table, 0
0 04 051			Principal time of daily reading of maximum temperature $\mathbf{G_xG_x}$	Hour, 0
0 12 118			Maximum temperature at height specified, past 24 h. $\mathbf{s_n\overline{T_xT_xT_x}}$	K, 2
0 04 052			Principal time of daily reading of minimum temperature $\mathbf{G_nG_n}$	Hour, 0
0 12 119			Minimum temperature at height specified, past 24 h. $\mathbf{s_n\overline{T_nT_nT_n}}$	K, 2
0 13 004			Vapour pressure $\overline{\mathbf{eee}}$	Pa, -1
0 12 151			Standard deviation of daily mean temperature $\mathbf{\overline{s_ts_ts_t}}$	K, 2
0 07 032			Height of sensor above local ground (set to missing to cancel the previous value)	m, 2
0 14 032			Total sunshine $\mathbf{S_1S_1S_1}$	Hour, 0
0 08 023			First order statistics (set to missing to cancel the previous value)	Code table, 0

			Normals of precipitation	
0 04 001			Year (of beginning of the reference period)	Year, 0
0 04 001			Year (of ending of the reference period)	Year, 0
0 04 002			Month	Month, 0
0 04 003			Day (= 1) (2)	Day, 0
0 04 004			Hour (= 6) (2)	Hour, 0
0 04 022			Time period (= 1)	Month, 0
0 07 032			Height of sensor above local ground(3)	m, 2
0 08 023			First order statistics (= 4; mean value)	Code table, 0
0 13 060			Total accumulated precipitation $\mathbf{R_1R_1R_1R_1}$	kg m^{-2}, 1
0 04 053			Number of days with precipitation equal to or more than 1 mm $\mathbf{n_rn_r}$	Numeric, 0
0 08 023			First order statistics (set to missing to cancel the previous value)	Code table, 0
			Number of missing years	
1 02 008			Replicate 2 descriptors 8 times	

0 08 050			Qualifier for number of missing values in calculation of statistic (= 1; pressure) (= 2; temperature) (= 3; extreme temperatures)(4) (= 4; vapour pressure) (= 5; precipitation) (= 6; sunshine duration) (= 7; maximum temperature) (4) (= 8; minimum temperature) (4)	Code table, 0
0 08 020			Total number of missing entities (years) $y_p y_p$ (for pressure) $y_T y_T$ (for temperature) $y_{Tx} y_{Tx}$ (for extreme temperatures)(4) $y_e y_e$ (for vapour pressure) $y_R y_R$ (for precipitation) $y_S y_S$ (for sunshine duration) for maximum temperature (4) for minimum_temperature (4)	Numeric, 0

Notes:

(1) The time identification refers to the beginning of the one-month period. Except for precipitation measurements, the one-month period is recommended to correspond to the local standard time (LST) month. [7]

(2) In case of precipitation measurements, the one-month period begins at 06 UTC on the first day of the month and ends at 06 UTC on the first day of the following month. [5]

(3) If the height of the sensor or observing method for extreme temperatures was changed during the period specified, the value shall be that which existed for the greater part of the period.

(4) The number of missing years within the reference period from the calculation of normal for mean extreme air temperature should be given, if available, for both the calculation of normal maximum temperature and for the calculation of normal minimum temperature in addition to the number of missing years for the extreme air temperatures reported under 0 08 020 preceded by 0 08 050 in which Figure 3 is used.

Regulations:

B/C 30.1 Section 1 of BUFR or CREX

B/C 30.2 Monthly values from a land station

B/C 30.2.1 Station identification, date/time, horizontal and vertical coordinates

B/C 30.2.2 Monthly mean values of pressure, temperature, extreme temperatures vapour pressure; standard deviation of daily mean temperature

B/C 30.2.3 Monthly duration **of sunshine**

B/C 30.2.4 Number of days with parameters beyond certain thresholds; number of days with thunderstorm and hail

B/C 30.2.5 Occurrence of extreme values of temperature and wind speed

B/C 30.2.6 Monthly precipitation data

B/C 30.2.7 Number of days with precipitation beyond certain thresholds

B/C 30.2.8 Occurrence of extreme precipitation

B/C 30.3 Monthly normals for a land station

B/C 30.3.1 Normals of pressure, temperatures, vapour pressure, standard deviation of daily mean temperature, and sunshine duration

B/C 30.3.2 Normals of precipitation

B/C 30.3.3 Number of missing years

B/C 30.4 Data required by regional or national reporting practices

B/C 30.1 Section 1 of BUFR or CREX

B/C 30.1.1 Entries required in Section 1 of BUFR

The following entries shall be included in BUFR Section 1:

-BUFR master table,
-identification of originating/generating centre,
-identification of originating/generating sub-centre,
-update sequence number,
-identification of inclusion of optional section,
-data category (= 000 for CLIMAT data),
-international data sub-category (1), (2),
-local data subcategory,
-version number of master table,
-version number of local tables,
-year (year of the century up to BUFR edition 3) (3),
-month (for which the monthly values are reported) (3),
-day (= 1) (3),
-hour (= 0) (3),
-minute (= 0) (3).

Notes:

(1) Inclusion of this entry is required starting with BUFR edition 4.
(2) If required, the international data sub-category shall be included for CLIMAT data as 020.
(3) The time identification refers to the beginning of the month for which the monthly mean values are reported.

B/C 30.1.2 Entries required in Section 1 of CREX

The following entries shall be included in CREX Section 1:

-CREX master table,
-CREX edition number,
-CREX table version number,
-version number of BUFR master table (1),
-version number of local tables (1),
-data category (= 000 for CLIMAT data),
-international data sub-category (1), (2),
-identification of originating/generating centre (1),
-identification of originating/generating sub-centre (1),
-update sequence number (1),
-number of subsets (1),
-year (1), (3),
-month (for which the monthly values are reported) (1), (3),
-day (= 1) (1), (3),

-hour (= 0) (1), (3),
-minute (= 0) (1), (3).

Notes:
(1) Inclusion of these entries is required starting with CREX edition 2.
(2) If inclusion of international data sub-category is required, Note (2) under B/C 30.1.1 applies.
(3) Note (3) under B/C 30.1.1 applies.

B/C 30.2 Monthly values from a land station <3 07 071>

B/C 30.2.1 Station identification, date/time, horizontal and vertical coordinates <3 01 090>

B/C 30.2.1.1 Station identification

WMO block number station (0 01 001) and WMO station number (0 01 002) shall be always reported as a non-missing value.

Station or site name (0 01 015) shall be reported as published in WMO-No. 306, Volume A, Observing Stations, provided that the station name does not exceed 20 characters. A shortened version of the name shall be reported otherwise.

Type of station (0 02 001) shall be reported to indicate the type of the station operation (manned, automatic or hybrid).

B/C 30.2.1.2 Date/time (of beginning of the month)

Date <3 01 011> and time <3 01 012> shall be reported, i.e. year (0 04 001), month (0 04 002), day (0 04 003) and hour (0 04 004), minute (0 04 005) of beginning of the month for which the monthly values are reported. Day (0 04 003) shall be set to 1 and both hour (0 04 004) and minute (0 04 005) shall be set to 0.

B/C 30.2.1.3 Horizontal and vertical coordinates

Latitude (0 05 001) and longitude (0 06 001) of the station shall be reported in degrees with precision in 10^{-5} of a degree.

Height of station ground above mean sea level (0 07 030) and height of barometer above mean sea level (0 07 031) shall be reported in meters with precision in tenths of a meter.

B/C 30.2.2 Monthly mean values of pressure, temperature, extreme temperatures and vapour pressure; standard deviation of daily mean temperature

The monthly mean values of pressure, pressure reduced to mean sea level or geopotential height, temperature, extreme temperatures and vapour pressure shall be reported. Any missing element shall

be reported as a missing value.

B/C 30.2.2.1 Reference period for the data of the month

Monthly data (with the exception of precipitation data) are recommended to be reported for one-month period, corresponding to the local standard time (LST) month. In that case, short time displacement (0 04 074) shall specify the difference between UTC and LST (set to *non-positive values in the eastern hemisphere, non-negative values in the western hemisphere*).

Time period (0 04 023) represents the number of days in the month for which the data are reported, and shall be expressed as a *positive value* in days.

Note:

(1) A BUFR (or CREX) message shall contain reports for one specific month only. [71.1.4]

B/C 30.2.2.2 First order statistics – Code table 0 08 023

This datum shall be set to 4 (mean value) to indicate that the following entries represent mean values of the elements (pressure, pressure reduced to mean sea level or geopotential height, temperature, extreme temperatures and vapour pressure) averaged over the one-month period.

B/C 30.2.2.3 Monthly mean value of pressure

Monthly mean value of pressure shall be reported using 0 10 004 (Pressure) in pascals (with precision in tens of a pascal).

B/C 30.2.2.4 Monthly mean value of pressure reduced to mean sea level

Monthly mean value of pressure reduced to mean sea level shall be reported using 0 10 051 (Pressure reduced to mean sea level) in pascals (with precision in tens of a pascal), if the air pressure at mean sea level can be computed with reasonable accuracy.

B/C 30.2.2.5 Monthly mean value of geopotential height

Monthly mean value of geopotential height of a standard level shall be reported using 0 10 009 (Geopotential height) in geopotential meters from high-level stations which cannot give pressure at mean sea level to a satisfactory degree of accuracy. The standard isobaric level is specified by the preceding entry Pressure (0 07 004).

B/C 30.2.2.6 Height of sensor above local ground

Height of sensor above local ground (0 07 032) for temperature and humidity measurement shall be reported in meters (with precision in hundredths of a meter).

This datum represents the actual height of temperature and humidity sensors above ground at the point where the sensors are located.

Note:

(1) If the height of the sensor was changed during the period specified, the value shall be that which existed for the greater part of the period.

B/C 30.2.2.7 Monthly mean value of temperature

Monthly mean value of temperature shall be reported using 0 12 101 (Temperature/dry bulb temperature) in degrees Kelvin (with precision in hundredths of a degree Kelvin); if produced in CREX, in degrees Celsius (with precision in hundredths of a degree Celsius). Temperature data shall

be reported with precision in hundredths of a degree even if they are available with the accuracy in tenths of a degree.

Notes:

(1) This requirement is based on the fact that conversion from the Kelvin to the Celsius scale has often resulted into distortion of the data values.

(2) Temperature t (in degrees Celsius) shall be converted into temperature T (in degrees Kelvin) using equation: T = t + 273.15.

B/C 30.2.2.8 Indicator to specify observing method for extreme temperatures – Code table 0 02 051

This datum shall be set to 1 (maximum/minimum thermometers) or to 2 (automated instruments) or to 3 (thermograph) to indicate observing method for extreme temperatures.

Note:

(1) If the observing method for extreme temperatures was changed during the period specified, the code figure shall be that which existed for the greater part of the period.

B/C 30.2.2.9 Monthly mean value of maximum temperature

Monthly mean value of maximum temperature shall be reported in degrees Kelvin (with precision in hundredths of a degree Kelvin); if produced in CREX, in degrees Celsius (with precision in hundredths of a degree Celsius).

Notes:

(1) Notes (1) and (2) under Regulation B/C 30.2.2.7 shall apply.

(2) The monthly mean value of maximum temperature shall be reported using 0 12 118 (Maximum temperature at height specified, past 24 hours). The height is specified by the preceding entry 0 07 032. Principal time of daily reading of maximum temperature (0 04 051) indicates the end of the 24 hour period to which the daily maximum temperature refers.

B/C 30.2.2.10 Monthly mean value of minimum temperature

Monthly mean value of minimum temperature shall be reported in degrees Kelvin (with precision in hundredths of a degree Kelvin); if produced in CREX, in degrees Celsius (with precision in hundredths of a degree Celsius).

Notes:

(1) Notes (1) and (2) under Regulation B/C 30.2.2.7 shall apply.

(2) The monthly mean value of minimum temperature shall be reported using 0 12 119 (Minimum temperature at height specified, past 24 hours). The height is specified by the preceding entry 0 07 032. Principal time of daily reading of minimum temperature (0 04 052) indicates the end of the 24 hour period to which the daily minimum temperature refers.

B/C 30.2.2.11 Monthly mean value of vapour pressure

Monthly mean value of vapour pressure shall be reported using 0 13 004 (Vapour pressure) in pascals (with precision in tens of a pascal).

B/C 30.2.2.12 First order statistics – Code table 0 08 023

This datum shall be set to missing to indicate that the following entries do not represent the monthly mean values.

B/C 30.2.2.13 Standard deviation of daily mean temperature

Standard deviation of daily mean temperature (0 12 151) shall be reported in degrees Kelvin (with precision in hundredths of a degree Kelvin); if produced in CREX, in degrees Celsius (with precision in

hundredths of a degree Celsius). [71.3.1]

B/C 30.2.2.14 Number of days in the month for which values are missing

Number of days in the month for which values are missing shall be reported using Total number of missing entities (0 08 020) being preceded by Qualifier for number of missing values in calculation of statistic (0 08 050) in each of the required five replications (1 02 005).

Qualifier for number of missing values in calculation of statistic (0 08 050) is - set to 1 (pressure) in the first replication,

- set to 2 (temperature) in the second replication,
- set to 4 (vapour pressure) in the third replication,
- set to 7 (maximum temperature) in the fourth replication,
- set to 8 (minimum temperature) in the fifth replication.

The number of days in the month for which values of the parameter are missing, shall be reported using 0 08 020 in the corresponding replication.

B/C 30.2.3 Monthly duration of sunshine

B/C 30.2.3.1 Total sunshine duration

The monthly values of total duration of sunshine shall be reported in hours using Total sunshine (0 14 032) and the percentage of the normal that that value represents shall be reported using Total sunshine (0 14 033). Any missing element shall be reported as a missing value.

Note:

(1) If the percentage of the normal is 1% or less but greater than 0, Total sunshine 0 14 033 shall be set to 1.
(2) If the normal is zero hours, *Total sunshine 0 14 033 shall be set to 510*.
(3) If the normal is not defined, Total sunshine 0 14 033 shall be set to missing. [71.3.3]

B/C 30.2.3.2 Number of days in the month for which sunshine data are missing

Number of days in the month for which sunshine data are missing shall be reported using Total number of missing entities (0 08 020) being preceded by Qualifier for number of missing values in calculation of statistic (0 08 050) set to 6 (sunshine duration).

B/C 30.2.4 Number of days with parameters beyond certain thresholds and number of days with thunderstorm and hail

Number of days in the month with parameters beyond certain thresholds and with thunderstorm and hail shall be reported using Total number (0 08 022) being preceded by Conditions for which number of days of occurrence follows (0 08 052) in each of the required eighteen replications (1 02 018).

Conditions for which number of days of occurrence follows (0 08 052) is

- set to 0 (mean wind speed over 10-minute period ≥ 10 m s^{-1}),
- set to 1 (mean wind speed over 10-minute period ≥ 20 m s^{-1}),
- set to 2 (mean wind speed over 10-minute period ≥ 30 m s^{-1}),
- set to 3 (maximum temperature < 273.15 K),
- set to 4 (maximum temperature ≥ 298.15 K),
- set to 5 (maximum temperature ≥ 303.15 K),

- set to 6 (maximum temperature ≥ 308.15 K),
- set to 7 (maximum temperature ≥ 313.15 K),
- set to 8 (minimum temperature < 273.15 K),
- set to 16 (snow depth > 0.00 m),
- set to 17 (snow depth > 0.01 m),
- set to 18 (snow depth > 0.10 m),
- set to 19 (snow depth > 0.50 m),
- set to 20 (horizontal visibility < 50 m),
- set to 21 (horizontal visibility < 100 m),
- set to 22 (horizontal visibility < 1000 m),
- set to 23 (occurrence of hail),

- set to 24 (occurrence of thunderstorm) in the last replication.

The number of days in the month with parameters beyond the specified thresholds and with thunderstorm and hail shall be reported using 0 08 022 in the corresponding replication.

Note:

(1) Number of days in the month with horizontal visibility beyond the specified thresholds is the number of days with visibility less than 50, 100 and 1000 m, respectively, *irrespective of the duration of the period* during which horizontal visibility below the specified thresholds was observed or recorded.

B/C 30.2.5 Occurrence of extreme values of temperatures and wind speed

B/C 30.2.5.1 Height of sensor above local ground (for temperature)

Height of sensor above local ground (0 07 032) for temperature measurement shall be reported in meters (with precision in hundredths of a meter).

This datum represents the actual height of temperature sensor above ground at the point where the sensor is located.

B/C 30.2.5.2 Occurrence of the highest daily mean temperature

The day on which the highest daily mean temperature occurred shall be reported using Day (0 04 003). If the highest daily mean temperature occurred on only one day, the preceding entry 0 08 053 (Day of occurrence qualifier) shall be set to 0. If the highest daily mean temperature occurred on more than one day, the first day shall be reported for 0 04 003 and the preceding entry 0 08 053 shall be set to 1. [71.6.1]

Highest daily mean temperature (0 12 152) shall be reported in degrees Kelvin (with precision in hundredths of a degree Kelvin); if produced in CREX, in degrees Celsius (with precision in hundredths of a degree Celsius).

Note:

(1) Notes (1) and (2) under Regulation B/C 30.2.2.7 shall apply.

B/C 30.2.5.3 Occurrence of the lowest daily mean temperature

The day on which the lowest daily mean temperature occurred shall be reported using Day (0 04 003). If the lowest daily mean temperature occurred on only one day, the preceding entry 0 08 053 (Day of occurrence qualifier) shall be set to 0. If the lowest daily mean temperature occurred on more than one day, the first day shall be reported for 0 04 003 and the preceding entry 0 08 053 shall be set to 1. [71.6.1]

Lowest daily mean temperature (0 12 152) shall be reported in degrees Kelvin (with precision in hundredths of a degree Kelvin); if produced in CREX, in degrees Celsius (with precision in hundredths of a degree Celsius).

Note:

(1) Notes (1) and (2) under Regulation B/C 30.2.2.7 shall apply.

B/C 30.2.5.4 Occurrence of the highest air temperature of the month

The day on which the highest air temperature occurred shall be reported using Day (0 04 003). If the highest air temperature occurred on only one day, the preceding entry 0 08 053 (Day of occurrence qualifier) shall be set to 0. If the highest air temperature occurred on more than one day, the first day shall be reported for 0 04 003 and the preceding entry 0 08 053 shall be set to 1. [71.6.1]

The highest air temperature of the month shall be reported using 0 12 101 (Temperature/dry bulb temperature), preceded by First order statistics (0 08 023) set to 2 (maximum value). The temperature shall be reported in degrees Kelvin (with precision in hundredths of a degree Kelvin); if produced in CREX, in degrees Celsius (with precision in hundredths of a degree Celsius).

Note:

(1) Notes (1) and (2) under Regulation B/C 30.2.2.7 shall apply.

B/C 30.2.5.5 Occurrence of the lowest air temperature of the month

The day on which the lowest air temperature occurred shall be reported using Day (0 04 003). If the lowest air temperature occurred on only one day, the preceding entry 0 08 053 (Day of occurrence qualifier) shall be set to 0. If the lowest air temperature occurred on more than one day, the first day shall be reported for 0 04 003 and the preceding entry 0 08 053 shall be set to 1. [71.6.1]

The lowest air temperature of the month shall be reported using 0 12 101 (Temperature/dry bulb temperature), preceded by First order statistics (0 08 023) set to 3 (minimum value). The temperature shall be reported in degrees Kelvin (with precision in hundredths of a degree Kelvin); if produced in CREX, in degrees Celsius (with precision in hundredths of a degree Celsius).

Note:

(1) Notes (1) and (2) under Regulation B/C 30.2.2.7 shall apply.

B/C 30.2.5.6 Height of sensor above local ground (for wind measurement)

Height of sensor above local ground (0 07 032) for wind measurement shall be reported in meters (with precision in hundredths of a meter).

This datum represents the actual height of wind sensors above ground at the point where the sensors are located.

B/C 30.2.5.7 Type of instrumentation for wind measurement - Flag table 0 02 002

This datum shall be used to specify whether the wind speed was measured by certified instruments (bit No. 1 set to 1) or estimated on the basis of the Beaufort wind scale (bit No. 1 set to 0), and to indicate the original units for wind speed measurement. Bit No. 2 set to 1 indicates that wind speed was originally measured in knots and bit No. 3 set to 1 indicates that wind speed was originally measured in kilometers per hour. Setting both bits No.2 and No.3 to 0 indicates that wind speed was originally

measured in meters per second.

In CREX, type of instrumentation for wind measurement (0 02 002) shall be reported in octal representation. For example, if wind speed was measured by instruments in knots (bit No.1 and bit No.2 set to 1), then this datum shall be reported as 14.

B/C 30.2.5.8 Occurrence of the highest instantaneous wind speed of the month

The day on which the highest instantaneous wind speed occurred shall be reported using Day (0 04 003). If the highest instantaneous wind speed occurred on only one day, the preceding entry 0 08 053 (Day of occurrence qualifier) shall be set to 0. If the highest instantaneous wind speed occurred on more than one day, the first day shall be reported for 0 04 003 and the preceding entry 0 08 053 shall be set to 1. [71.6.1]

The highest instantaneous wind speed of the month shall be reported using 0 11 046 (Maximum instantaneous wind speed) in meters per second (with precision in tenths of a meter per second).

B/C 30.2.6 Monthly precipitation data

B/C 30.2.6.1 Date/time (of beginning of the one-month period for precipitation data)

Day (0 04 003) and hour (0 04 004) of the beginning of the one-month period for monthly precipitation data are reported. Day (0 04 003) shall be set to 1 and hour (0 04 004) *shall be set to 6*.

Notes:

(1) In case of precipitation measurements, a month begins at 0600 hours UTC on the first day of the month and ends at 0600 hours UTC on the first day of the following month *[Guide to Climatoligical Practices, WMO-No. 100]*.

(2) Year (0 04 001), month (0 04 002) and minute (0 04 005) of the beginning of the one-month period specified in the Regulations B/C 30.2.1.2 apply.

B/C 30.2.6.2 Period of reference for precipitation data of the month

Time period (0 04 023) represents the number of days in the month for which the monthly mean data are reported, and shall be expressed as a *positive value* in days.

Note:

(1) A BUFR (or CREX) message shall contain reports for one specific month only. [71.1.4]

B/C 30.2.6.3 Height of sensor above local ground

Height of sensor above local ground (0 07 032) for precipitation measurement shall be reported in meters (with precision in hundredths of a meter).

This datum represents the actual height of the rain gauge rim above ground at the point where the rain gauge is located.

Note:

(1) If the height of the sensor was changed during the period specified, the value shall be that which existed for the greater part of the period.

B/C 30.2.6.4 Total amount of precipitation of the month

Total accumulated precipitation (0 13 060) which has fallen during the month shall be reported in kilograms per square meter (with precision in tenths of a kilogram per square meter).

Note:

(1) Trace shall be reported as “- 0.1 kg m-2 “.

B/C 30.2.6.5 Indication of frequency group

Frequency group in which the total amount of precipitation of the month falls shall be reported using Code table 0 13 051 (Frequency group; precipitation).

Note:

(1) If for a particular month the total amount of precipitation is zero, the code figure for 0 13 051 shall be given by the highest number of quintile which has 0.0 as lower limit (e.g. in months with no rainfall in the 30-year period, 0 13 051 shall be set to 5). [71.3.2]

B/C 30.2.6.6 Number of days with precipitation equal to or greater than 1 mm

Number of days in the month with precipitation equal to or greater than 1 kilogram per square meter shall be reported using 0 04 053 (Number of days in the month with precipitation equal to or greater than 1 mm).

B/C 30.2.6.7 Number of days in the month for which precipitation data is missing

Number of days in the month for which precipitation is missing shall be reported using Total number of missing entities (0 08 020) being preceded by Qualifier for number of missing values in calculation of statistic (0 08 050) set to 5 (precipitation).

B/C 30.2.7 Number of days with precipitation beyond certain thresholds

Number of days in the month with precipitation beyond certain thresholds shall be reported using Total number (0 08 022) being preceded by Conditions for which number of days of occurrence follows (0 08 052) in each of the required six replications (1 02 006).

Conditions for which number of days of occurrence follows (0 08 052) is

- set to 10 (precipitation ≥ 1.0 kg m^{-2}) in the first replication,
- set to 11 (precipitation ≥ 5.0 kg m^{-2}),
- set to 12 (precipitation ≥ 10.0 kg m^{-2}),
- set to 13 (precipitation ≥ 50.0 kg m^{-2}),
- set to 14 (precipitation ≥ 100.0 kg m^{-2}),
- set to 15 (precipitation ≥ 150.0 kg m^{-2}) in the last replication.

The number of days in the month with precipitation beyond the specified thresholds shall be reported using 0 08 022 in the corresponding replication.

B/C 30.2.8 Occurrence of extreme precipitation

The day on which the highest daily amount of precipitation occurred shall be reported using Day (0 04 003). If the highest daily amount of precipitation occurred on only one day, the preceding entry 0 08 053 (Day of occurrence qualifier) shall be set to 0. If the highest daily amount of precipitation occurred on more than one day, the first day shall be reported for 0 04 003 and the preceding entry 0 08 053 shall be set to 1. [71.6.1]

Highest daily amount of precipitation (0 13 052) shall be reported in kilograms per square meter (with precision in tenths of a kilogram per square meter).

Note:

(1) Trace shall be reported as “- 0.1 kg m^{-2} “.

B/C 30.3 Monthly normals for a land station <3 07 072>

Meteorological Services shall submit to the Secretariat complete normal data of the elements for stations to be included in the CLIMAT bulletins. The same shall apply when Services consider it necessary to make amendments to previously published normal values. [71.4.1]

B/C 30.3.1 Normals of pressure, temperatures, vapour pressure, standard deviation of daily mean temperature, and sunshine duration

Normal values of pressure, pressure reduced to mean sea level or geopotential height, temperature, extreme temperatures, vapour pressure, standard deviation of daily mean temperature, and sunshine duration shall be reported. Any missing element shall be reported as a missing value.

B/C 30.3.1.1 Reference period for normal data

Reference period for calculation of the normal values of the elements shall be reported using two consecutive entries 0 04 001 (Year). The first 0 04 001 shall express the year of beginning of the reference period and the second 0 04 001 shall express the year of ending of the reference period.

Note:

(1) The normal data reported shall be deduced from observations made over a specific period defined by *Technical Regulations*. [71.4.2]

B/C 30.3.1.2 Specification of the one-month period for which normals are reported

The one-month period for which the normal values are reported shall be specified by month (0 04 002), day (0 04 003) being set to 1, hour (0 04 004) being set to 0, short time displacement (0 04 074) and time period (0 04 022) being set to 1, i.e. 1 month.

Short time displacement (0 04 074) shall be set to *non-positive values in the eastern hemisphere, negative values in the western hemisphere*.

B/C 30.3.1.3 First order statistics – Code table 0 08 023

This datum shall be set to 4 (mean value) to indicate that the following entries represent mean values of the elements (pressure, pressure reduced to mean sea level or geopotential height, temperature, extreme temperatures, vapour pressure, standard deviation of daily mean temperature and sunshine duration) averaged over the reference period specified in Regulation B/C 30.3.1.1.

B/C 30.3.1.4 Normal value of pressure

Normal value of pressure shall be reported using 0 10 004 (Pressure) in pascals (with precision in tens of a pascal).

B/C 30.3.1.5 Normal value of pressure reduced to mean sea level

Normal value of pressure reduced to mean sea level shall be reported using 0 10 051 (Pressure reduced to mean sea level) in pascals (with precision in tens of a pascal), if the air pressure at mean sea level can be computed with reasonable accuracy.

B/C 30.3.1.6 Normal value of geopotential height

Normal value of geopotential height of a standard level shall be reported using 0 10 009 (Geopotential height) in geopotential meters from high-level stations which cannot give pressure at mean sea level to a satisfactory degree of accuracy. The standard isobaric level is specified by the preceding entry Pressure (0 07 004).

B/C 30.3.1.7 Height of sensor above local ground

Regulation B/C 30.2.2.6 shall apply.

B/C 30.3.1.8 Normal value of temperature

Normal value of temperature shall be reported using 0 12 101 (Temperature/dry bulb temperature) in degrees Kelvin (with precision in hundredths of a degree Kelvin); if produced in CREX, in degrees Celsius (with precision in hundredths of a degree Celsius).

Note:

(1) Notes (1) and (2) under Regulation B/C 30.2.2.7 shall apply.

B/C 30.3.1.9 Indicator to specify observing method for extreme temperatures –

Code table 0 02 051

Regulation B/C 30.2.2.8 shall apply.

B/C 30.3.1.10 Normal value of maximum temperature

Normal value of maximum temperature shall be reported in degrees Kelvin (with precision in hundredths of a degree Kelvin); if produced in CREX, in degrees Celsius (with precision in hundredths of a degree Celsius).

Notes:

(1) Notes (1) and (2) under Regulation B/C 30.2.2.7 shall apply.

(2) Note (2) under Regulation B/C 30.2.2.9 shall apply.

B/C 30.3.1.11 Normal value of minimum temperature

Normal value of minimum temperature shall be reported in degrees Kelvin (with precision in hundredths of a degree Kelvin); if produced in CREX, in degrees Celsius (with precision in hundredths of a degree Celsius).

Notes:

(1) Notes (1) and (2) under Regulation B/C 30.2.2.7 shall apply.

(2) Note (2) under Regulation B/C 30.2.2.10 shall apply.

B/C 30.3.1.12 Normal value of vapour pressure

Normal value of vapour pressure shall be reported using 0 13 004 (Vapour pressure) in pascals (with precision in tens of a pascal).

B/C 30.3.1.13 Normal value of standard deviation of daily mean temperature

Normal value of standard deviation of daily mean temperature shall be reported using 0 12 151 in degrees Kelvin (with precision in hundredths of a degree Kelvin); if produced in CREX, in degrees Celsius (with precision in hundredths of a degree Celsius).

B/C 30.3.1.14 Normal of monthly sunshine duration

Normal of monthly sunshine duration shall be reported in hours using 0 14 032 (Total sunshine).

B/C 30.3.2 Normals of precipitation

Normal values of monthly amount of precipitation and of number of days in the month with precipitation equal to or greater than 1 mm, shall be reported. Any missing element shall be reported as a missing value.

B/C 30.3.2.1 Reference period for normal values of precipitation

Reference period for calculation of the normal values of precipitation shall be reported using two consecutive entries 0 04 001 (Year). The first 0 04 001 shall express the year of beginning of the reference period and the second 0 04 001 shall express the year of ending of the reference period.

Note:

(1) Note (1) under Regulation B/C 30.3.1.1 shall apply.

B/C 30.3.2.2 Specification of the one-month period for which normals are reported

The one-month period for which the normals of precipitation are reported shall be specified by month (0 04 002), day (0 04 003) being set to 1, hour (0 04 004) *being set to 6* and time period (0 04 022) being set to 1, i.e. 1 month.

Note:

(1) Note (1) under Regulation B/C 30.2.6.1 shall apply.

B/C 30.3.2.3 Height of sensor above local ground

Regulation B/C 30.2.6.3 shall apply.

B/C 30.3.2.4 First order statistics – Code table 0 08 023

This datum shall be set to 4 (mean value) to indicate that the following entries represent mean values of precipitation data, averaged over the reference period specified in Regulation B/C 30.3.2.1.

B/C 30.3.2.5 Normal value of monthly amount of precipitation

Normal value of monthly amount of precipitation shall be reported in kilograms per square meter (with precision in tenths of a kilogram per square meter) using 0 13 060 (Total accumulated precipitation).

Note:

(1) Trace shall be reported as "- 0.1 kg m^{-2} ".

B/C 30.3.2.6 Normal value of number of days with precipitation ≥ 1 mm

Normal value of number of days in the month with precipitation equal to or greater than 1 kilogram per square meter shall be reported using 0 04 053 (Number of days in the month with precipitation equal to or greater than 1 mm).

B/C 30.3.3 Number of missing years

Number of missing years within the reference period shall be reported using Total number of missing entities (0 08 020) being preceded by Qualifier for number of missing values in calculation of statistic (0 08 050) in each of the required eight replications
(1 02 008).

Qualifier for number of missing values in calculation of statistic (0 08 050) is
- set to 1 (pressure) in the first replication,
- set to 2 (temperature),
- set to 3 (extreme temperatures),
- set to 4 (vapour pressure),
- set to 5 (precipitation),
- set to 6 (sunshine duration),
- set to 7 (maximum temperature),
- set to 8 (minimum temperature) in the last replication.

The number of missing years within the reference period for calculation of the normal values of the element shall be reported using 0 08 020 in the corresponding replication.

Note:

(1) The number of missing years within the reference period from the calculation of normal for mean extreme air temperature should be given, if available, for both the calculation of normal maximum temperature and for the calculation of normal minimum temperature in addition to the number of missing years for the extreme air temperatures reported under 0 08 020 preceded by 0 08 050 in which Figure 3 is used.

B/C 30.4 Data required by regional or national reporting practices

No additional data are currently required by regional or national reporting practices for CLIMAT data in the *Manual on Codes*, WMO-No. 306, Volume II.

B/C32 – Regulations for reporting CLIMAT SHIP data in TDCF

TM 308013 - BUFR template for reports of monthly values from an ocean weather station suitable for CLIMAT SHIP data

3 08 013		**Sequence for representation of monthly values suitable for CLIMAT SHIP data**
	3 08 011	Monthly values from an ocean weather station
	3 08 012	Monthly normals for an ocean weather station

Monthly values from an ocean weather station (data of CLIMAT SHIP Section 1) Sequence BUFR descriptor **<3 08 011>** expands as shown in the leftmost column below.			
		Station identification, date/time, horizontal and vertical coordinates	Unit, scale
0 01 011		Ship's call sign	CCITT IA5, 0
0 02 001		Type of station	Code table, 0
3 01 011	0 04 001	Year(1)	Year, 0
	0 04 002	Month(1)	Month, 0
	0 04 003	Day (= 1) (1)	Day, 0
3 01 012	0 04 004	Hour (= 0) (1)	Hour, 0
	0 04 005	Minute (= 0) (1)	Minute, 0
3 01 023	0 05 002	Latitude (coarse accuracy) $\mathbf{L_aL_aL_a}$	Degree, 2
	0 06 002	Longitude (coarse accuracy) $\mathbf{L_oL_oL_oL_o}$	Degree, 2
0 07 030		Height of station platform above mean sea level	m, 1
0 07 031		Height of barometer above mean sea level	m, 1
		Monthly mean values of pressure, temperature, vapour pressure and sea/water temperature	
0 04 074		Short time displacement (= UTC - LST) (1)	Hour, 0
0 04 023		Time period (= number of days in the month)	Day, 0
0 08 023		First order statistics (= 4; mean value)	Code table, 0
0 10 051		Pressure reduced to msl $\overline{\mathbf{PPPP}}$	Pa, –1
0 07 032		Height of sensor above marine deck platform (for temperature measurement) (3)	m, 2
0 07 033		Height of sensor above water surface (for temperature measurement) (3)	m, 1
0 12 101		Temperature/dry-bulb temperature $\mathbf{s_n\overline{TTT}}$	K, 2

0 13 004		Vapour pressure $\overline{\mathbf{eee}}$	Pa, -1
0 07 032		Height of sensor above marine deck platform (set to missing to cancel the previous value)	m, 2
0 07 033		Height of sensor above water surface (set to missing to cancel the previous value)	m, 1
3 02 056		Sea surface temperature, method of measurement, and depth below sea surface	
	0 02 038	Method of sea/water temperature measurement(3)	Code table, 0
	0 07 063	Depth below sea/water surface (for sea surface temperature measurement) (3)	m, 2
	0 22 043	Sea/water temperature $\overline{\mathbf{s_nT_wT_wT_w}}$	K, 2
	0 07 063	Depth below sea/water surface (set to missing to cancel the previous value)	m, 2
0 08 023		First order statistics (set to missing to cancel the previous value)	Code table, 0
		Monthly precipitation data	
0 04 003		Day (= 1) (2)	Day, 0
0 04 004		Hour (= 6) (2)	Hour, 0
0 04 023		Time period (= number of days in the month) (2)	Day, 0
0 07 032		Height of sensor above marine deck platform(3)	m, 2
0 13 060		Total accumulated precipitation $\mathbf{R_1R_1R_1R_1}$	kg m^{-2}, 1
0 13 051		Frequency group; precipitation $\mathbf{R_d}$	Code table, 0
0 04 053		Number of days with precipitation equal to or more than 1 mm $\mathbf{n_rn_r}$	Numeric, 0
0 07 032		Height of sensor above marine deck platform (set to missing to cancel the previous value)	m, 2
Monthly normals for an ocean weather station (data of CLIMAT SHIP Section 2) Sequence BUFR descriptor **<3 08 012>** expands as shown in the leftmost column below.			
		Normals of pressure, temperature, vapour pressure and sea/water temperature	Unit, scale
0 04 001		Year (of beginning of the reference period)	Year, 0
0 04 001		Year (of ending of the reference period)	Year, 0
0 04 002		Month	Month, 0
0 04 003		Day (= 1) (1)	Day, 0
0 04 004		Hour (= 0) (1)	Hour, 0
0 04 074		Short time displacement (= UTC - LST) (1)	Hour, 0
0 04 022		Time period (= 1)	Month, 0
0 08 023		First order statistics (= 4; mean value)	Code table, 0
0 10 051		Pressure reduced to msl $\overline{\mathbf{PPPP}}$	Pa, –1
0 07 032		Height of sensor above marine deck platform (for temperature measurement) (3)	m, 2
0 07 033		Height of sensor above water surface (for temperature measurement) (3)	m, 1
0 12 101		Temperature/dry-bulb temperature $\mathbf{s_n\overline{TTT}}$	K, 2
0 13 004		Vapour pressure $\overline{\mathbf{eee}}$	Pa, -1
0 07 032		Height of sensor above marine deck platform (set to missing to cancel the previous value	m, 2
0 07 033		Height of sensor above water surface (set to missing to cancel the previous value)	m, 1
3 02 056		Sea surface temperature, method of measurement, and depth	

		below sea surface	
	0 02 038	Method of sea/water temperature measurement(3)	Code table, 0
	0 07 063	Depth below sea/water surface (for sea surface temperature measurement) (3)	m, 2
	0 22 043	Sea/water temperature $\overline{\mathbf{s_n T_w T_w T_w}}$	K, 2
	0 07 063	Depth below sea/water surface (set to missing to cancel the previous value)	m, 2
0 08 023		First order statistics (set to missing to cancel the previous value)	Code table, 0
		Normals of precipitation	
0 04 001		Year (of beginning of the reference period)	Year, 0
0 04 001		Year (of ending of the reference period)	Year, 0
0 04 002		Month	Month, 0
0 04 003		Day (= 1) (2)	Day, 0
0 04 004		Hour (= 6) (2)	Hour, 0
0 04 022		Time period (= 1)	Month, 0
0 07 032		Height of sensor above marine deck platform (for precipitation measurement) (3)	m, 2
0 08 023		First order statistics (= 4; mean value)	Code table, 0
0 13 060		Total accumulated precipitation $\mathbf{R_1R_1R_1R_1}$	kg m^{-2}, 1
0 04 053		Number of days with precipitation equal to or more than 1 mm $\mathbf{n_r n_r}$	Numeric, 0
0 08 023		First order statistics (set to missing to cancel the previous value)	Code table, 0

Notes:

(1) The time identification refers to the beginning of the one-month period. Except for precipitation measurements, the one-month period is recommended to correspond to the local standard time (LST) month [7].

(2) In case of precipitation measurements, the one-month period begins at 06 UTC on the first day of the month and ends at 06 UTC on the first day of the following month [5].

(3) If the heights/depth of sensors or method of sea/water temperature measurement were changed during the period specified, the value shall be that which existed for the greater part of the period.

Regulations:

B/C 32.1 Section 1 of BUFR or CREX

B/C 32.2 Monthly values from an ocean weather station

B/C 32.2.1 Station identification, date/time, horizontal and vertical coordinates

B/C 32.2.2 Monthly mean values of pressure, temperature, vapour pressure and sea/water temperature

B/C 32.2.3 Monthly precipitation data

B/C 32.3 Monthly normals for an ocean weather station

B/C 32.3.1 Normals of pressure, temperature, vapour pressure and sea/water temperature

B/C 32.3.2 Normals of precipitation

B/C 32.4 Data required by regional or national reporting practices

B/C 32.1 Section 1 of BUFR or CREX

B/C 32.1.1 Entries required in Section 1 of BUFR

The following entries shall be included in BUFR Section 1:

-BUFR master table,

-identification of originating/generating centre,

-identification of originating/generating sub-centre,

-update sequence number,

-identification of inclusion of optional section,

-data category (= 001 for CLIMAT SHIP data),

-international data sub-category (1), (2),

-local data subcategory,

-version number of master table,

-version number of local tables,

-year (year of the century up to BUFR edition 3) (3),

-month (for which the monthly values are reported) (3),

-day (= 1) (3),

-hour (= 0) (3),

-minute (= 0) (3).

Notes:

(1) Inclusion of this entry is required starting with BUFR edition 4.

(2) If required, the international data sub-category shall be included for CLIMAT SHIP data as 020.

(3) The time identification refers to the beginning of the month for which the monthly mean values are reported.

B/C 32.1.2 Entries required in Section 1 of CREX

The following entries shall be included in CREX Section 1:

- CREX master table,
- CREX edition number,
- CREX table version number,
- version number of BUFR master table (1),
- version number of local tables (1),
- data category (= 001 for CLIMAT SHIP data),
- international data sub-category (1), (2),
- identification of originating/generating centre (1),
- identification of originating/generating sub-centre (1),
- update sequence number (1),
- number of subsets (1),
- year (1), (3),
- month (for which the monthly values are reported) (1), (3),
- day (= 1) (1), (3),
- hour (= 0) (1), (3),
- minute (= 0) (1), (3).

Notes:

(1) Inclusion of these entries is required starting with CREX edition 2.

(2) If inclusion of international data sub-category is required, Note (2) under B/C 32.1.1 applies.

(3) Note (3) under B/C 32.1.1 applies.

B/C 32.2 Monthly values from an ocean weather station <3 08 011>

B/C 32.2.1 Station identification, date/time, horizontal and vertical coordinates

B/C 32.2.1.1 Station identification

Ship identifier (0 01 011) shall be always reported as a non-missing value.

Type of station (0 02 001) shall be reported to indicate the type of the station operation (manned, automatic or hybrid).

B/C 32.2.1.2 Date/time (of beginning of the month)

Date <3 01 011> and time <3 01 012> shall be reported, i.e. year (0 04 001), month (0 04 002), day (0 04 003) and hour (0 04 004), minute (0 04 005) of beginning of the month for which the monthly values are reported. Day (0 04 003) shall be set to 1 and both hour (0 04 004) and minute (0 04 005) shall be set to 0.

B/C 32.2.1.3 Horizontal and vertical coordinates

Latitude (0 05 002) and longitude (0 06 002) of the station shall be reported in degrees with precision in hundredths of a degree.
Height of station platform above mean sea level (0 07 030) and height of barometer above mean sea level (0 07 031) shall be reported in meters with precision in tenths of a meter.

B/C 32.2.2 Monthly mean values of pressure, temperature, vapour pressure and

sea/water temperature

The monthly mean values of pressure reduced to mean sea level, temperature, vapour pressure and sea/water temperature shall be reported. Any missing element shall be reported as a missing value.

B/C 32.2.2.1 Reference period for the data of the month

Monthly data (with the exception of precipitation data) are recommended to be reported for one-month period, corresponding to the local standard time (LST) month. In that case, short time displacement (0 04 074) shall specify the difference between UTC and LST (set to *non-positive values in the eastern hemisphere, non-negative values in the western hemisphere*).
Time period (0 04 023) represents the number of days in the month for which the data are reported, and shall be expressed as a *positive value* in days.
Note:

(1) A BUFR (or CREX) message shall contain reports for one specific month only. [72.1.3]

B/C 32.2.2.2 First order statistics – Code table 0 08 023

This datum shall be set to 4 (mean value) to indicate that the following entries represent mean values of the elements (pressure reduced to mean sea level, temperature, vapour pressure and sea/water temperature) averaged over the one-month period.

B/C 32.2.2.3 Monthly mean value of pressure reduced to mean sea level

Monthly mean value of pressure reduced to mean sea level shall be reported using 0 10 051 (Pressure

reduced to mean sea level) in pascals (with precision in tens of a pascal).

B/C 32.2.2.4 Height of sensor above marine deck platform and height of sensor

above water surface

Height of sensor above marine deck platform (0 07 032) for temperature and humidity measurement shall be reported in meters (with precision in hundredths of a meter). This datum represents the actual height of temperature and humidity sensors above marine deck platform at the point where the sensors are located.

Height of sensor above water surface (0 07 033) for temperature and humidity measurement shall be reported in meters (with precision in hundredths of a meter). This datum represents the actual height of temperature and humidity sensors above water surface of sea or lake.

Note:

(1) If the heights of the sensors were changed during the period specified, the value shall be that which existed for the greater part of the period.

B/C 32.2.2.5 Monthly mean value of temperature

Monthly mean value of temperature shall be reported using 0 12 101 (Temperature/dry bulb temperature) in degrees Kelvin (with precision in hundredths of a degree Kelvin); if produced in CREX, in degrees Celsius (with precision in hundredths of a degree Celsius). Temperature data shall be reported with precision in hundredths of a degree even if they are available with the accuracy in tenths of a degree.

Notes:

(1) This requirement is based on the fact that conversion from the Kelvin to the Celsius scale has often resulted into distortion of the data values.

(2) Temperature t (in degrees Celsius) shall be converted into temperature T (in degrees Kelvin) using equation: $T = t + 273.15$.

B/C 32.2.2.6 Monthly mean value of vapour pressure

Monthly mean value of vapour pressure shall be reported using 0 13 004 (Vapour pressure) in pascals (with precision in tens of a pascal).

B/C 32.2.2.7 Monthly mean value of sea surface temperature, method of its measurement and depth below sea/water surface

Method of sea/water temperature measurement shall be reported by Code table 0 02 038; depth below sea/water surface (0 07 063) shall be reported in meters (with precision in hundredths of a meter).

Monthly mean value of sea surface temperature shall be reported using 0 22 043 (Sea/water temperature) in degrees Kelvin (with precision in hundredths of a degree Kelvin); if produced in CREX, in degrees Celsius (with precision in hundredths of a degree Celsius). Sea/water temperature data shall be reported with precision in hundredths of a degree even if they are available with the accuracy in tenths of a degree.

Notes:

(1) If the method of sea/water temperature measurement or the depth of the sensor below sea/water surface was changed during the period specified, the value shall be that which existed for the greater part of the period.

(2) Notes (1) and (2) under Regulation B/C 32.2.2.5 shall apply.

B/C 32.2.2.8 First order statistics – Code table 0 08 023

This datum shall be set to missing to indicate that the following entries do not represent the monthly mean values.

B/C 32.2.3 Monthly precipitation data

B/C 32.2.3.1 Date/time (of beginning of the one-month period for precipitation data)

Day (0 04 003) and hour (0 04 004) of the beginning of the one-month period for monthly precipitation data are reported. Day (0 04 003) shall be set to 1 and hour (0 04 004) *shall be set to 6*.

Notes:

(1) In case of precipitation measurements, a month begins at 0600 hours UTC on the first day of the month and ends at 0600 hours UTC on the first day of the following month *[Guide to Climatoligical Practices, WMO-No. 100]*.

(2) Year (0 04 001), month (0 04 002) and minute (0 04 005) of the beginning of the month specified in the Regulations B/C 32.2.1.2 apply.

B/C 32.2.3.2 Period of reference for precipitation data of the month

Time period (0 04 023) represents the number of days in the month for which the monthly mean data are reported, and shall be expressed as a *positive value* in days.

Note:

(1) A BUFR (or CREX) message shall contain reports for one specific month only. [72.1.3]

B/C 32.2.3.3 Height of sensor above marine deck platform

Height of sensor above marine deck platform (0 07 032) for precipitation measurement shall be reported in meters (with precision in hundredths of a meter).

This datum represents the actual height of the rain gauge rim above marine deck platform at the point where the rain gauge is located.

Note:

(1) If the height of the sensor was changed during the period specified, the value shall be that which existed for the greater part of the period.

B/C 32.2.3.4 Total amount of precipitation of the month

Total accumulated precipitation (0 13 060) which has fallen during the month shall be reported in kilograms per square meter (with precision in tenths of a kilogram per square meter).

Note:

(1) Trace shall be reported as "- 0.1 kg m^{-2} ".

B/C 32.2.3.5 Indication of frequency group

Frequency group in which the total amount of precipitation of the month falls shall be reported using Code table 0 13 051 (Frequency group; precipitation).

Note:

(1) If for a particular month the total amount of precipitation is zero, the code figure for 0 13 051 shall be given by the highest number of quintile which has 0.0 as lower limit (e.g. in months with no rainfall in the 30-year period, 0 13 051 shall be set to 5). [72.1.4.2]

B/C 32.2.3.6 Number of days with precipitation equal to or greater than 1 mm

Number of days in the month with precipitation equal to or greater than 1 kilogram per square meter shall be reported using 0 04 053 (Number of days in the month with precipitation equal to or greater than 1 mm).

Note:

(1) When the monthly total precipitation is not available, both 0 13 060 and 0 04 053 shall be set to missing. [72.1.4.1]

B/C 32.3 Monthly normals for an ocean weather station <3 08 012>

Meteorological Services shall submit to the Secretariat complete normal data of the elements for stations to be included in the CLIMAT bulletins. The same shall apply when Services consider it necessary to make amendments to previously published normal values. [72.2.1]

B/C 32.3.1 Normals of pressure, temperature, vapour pressure and sea/water temperature

Normal values of pressure reduced to mean sea level, temperature, vapour pressure and sea/water temperature shall be reported. Any missing element shall be reported as a missing value.

B/C 32.3.1.1 Reference period for normal data

Reference period for calculation of the normal values of the elements shall be reported using two consecutive entries 0 04 001 (Year). The first 0 04 001 shall express the year of beginning of the reference period and the second 0 04 001 shall express the year of ending of the reference period.

Note:

(1) The normal data of pressure, temperature and sea/water temperature reported shall be deduced from observations made over a 30-year normal period. [72.2.2]

B/C 32.3.1.2 Specification of the one-month period for which normals are reported

The one-month period for which the normal values are reported shall be specified by month (0 04 002), day (0 04 003) being set to 1, hour (0 04 004) being set to 0, short time displacement (0 04 074) and time period (0 04 022) being set to 1, i.e. 1 month.

Short time displacement (0 04 074) shall be set to *non-positive values in the eastern hemisphere, non-negative values in the western hemisphere*.

B/C 32.3.1.3 First order statistics – Code table 0 08 023

This datum shall be set to 4 (mean value) to indicate that the following entries represent mean values of the elements (pressure reduced to mean sea level, temperature, vapour pressure and sea/water temperature) averaged over the reference period specified in Regulation B/C 32.3.1.1.

B/C 32.3.1.4 Normal value of pressure reduced to mean sea level

Normal value of pressure reduced to mean sea level shall be reported using 0 10 051 (Pressure reduced to mean sea level) in pascals (with precision in tens of a pascal).

B/C 32.3.1.5 Height of sensor above marine deck platform and height of sensor above water surface

Regulation B/C 32.2.2.4 shall apply.

B/C 32.3.1.6 Normal value of temperature

Normal value of temperature shall be reported using 0 12 101 (Temperature/dry bulb temperature) in degrees Kelvin (with precision in hundredths of a degree Kelvin); if produced in CREX, in degrees Celsius (with precision in hundredths of a degree Celsius).

Note:

(1) Notes (1) and (2) under Regulation B/C 32.2.2.5 shall apply.

B/C 32.3.1.7 Normal value of vapour pressure

Normal value of vapour pressure shall be reported using 0 13 004 (Vapour pressure) in pascals (with precision in tens of a pascal).

B/C 32.3.1.8 Normal value of sea surface temperature, method of measurement

and depth below sea/water surface

Method of sea/water temperature measurement shall be reported by Code table 0 02 038; depth below sea/water surface (0 07 063) shall be reported in meters (with precision in hundredths of a meter).

Normal value of sea surface temperature shall be reported using 0 22 043 (Sea/water temperature) in degrees Kelvin (with precision in hundredths of a degree Kelvin); if produced in CREX, in degrees Celsius (with precision in hundredths of a degree Celsius).

Notes:

(1) Note (1) under Regulation B/C 32.2.2.7 shall apply.

(2) Notes (1) and (2) under Regulation B/C 32.2.2.5 shall apply.

B/C 32.3.2 Normals of precipitation

Normal values of monthly amount of precipitation and of number of days in the month with precipitation equal to or greater than 1 mm, shall be reported. Any missing element shall be reported as a missing value.

B/C 32.3.2.1 Reference period for normal values of precipitation

Reference period for calculation of the normal values of precipitation shall be reported using two consecutive entries 0 04 001 (Year). The first 0 04 001 shall express the year of beginning of the reference period and the second 0 04 001 shall express the year of ending of the reference period.

B/C 32.3.2.2 Specification of the one-month period for which normals are reported

The one-month period for which the normals of precipitation are reported shall be specified by month (0 04 002), day (0 04 003) being set to 1, hour (0 04 004) *being set to 6* and time period (0 04 022) being set to 1, i.e. 1 month.

Note:

(1) Note (1) under Regulation B/C 32.2.3.1 shall apply.

B/C 32.3.2.3 Height of sensor above local marine deck platform

Regulation B/C 32.2.3.3 shall apply.

B/C 32.3.2.4 First order statistics – Code table 0 08 023

This datum shall be set to 4 (mean value) to indicate that the following entries represent mean values of precipitation data, averaged over the reference period specified in Regulation B/C 32.3.2.1.

B/C 32.3.2.5 Normal value of monthly amount of precipitation

Normal value of monthly amount of precipitation shall be reported in kilograms per square meter (with precision in tenths of a kilogram per square meter) using 0 13 060 (Total accumulated precipitation).

Note:

(1) Trace shall be reported as "- 0.1 kg m^{-2} ".

B/C 32.3.2.6 Normal value of number of days with precipitation ≥ 1 mm

Normal value of number of days in the month with precipitation equal to or greater than 1 kilogram per square meter shall be reported using 0 04 053 (Number of days in the month with precipitation equal to or greater than 1 mm).

B/C 32.4 Data required by regional or national reporting practices

No additional data are currently required by regional or national reporting practices for CLIMAT SHIP data in the *Manual on Codes*, WMO-No. 306, Volume II.

B/C35 – Regulations for reporting CLIMAT TEMP and CLIMAT TEMP SHIP and data in TDCF

General

A BUFR (or CREX) message shall contain reports for one specific month only. [75.8]

TM 309054 - BUFR template for reports of monthly aerological means suitable for CLIMAT TEMP and CLIMAT TEMP SHIP data

3 09 054		**Sequence for representation CLIMAT TEMP and CLIMAT TEMP SHIP data**

Sequence BUFR descriptor <3 09 054> expands as it is shown in the leftmost column below:

		Identification of launch site	Unit, scale
3 01 001	0 01 001	WMO block number	Numeric, 0
	0 01 002	WMO station number	Numeric, 0
0 01 011		Ship's call sign	CCITT IA5, 0
		Date/time(1)	
3 01 011	0 04 001	Year(1)	Year, 0
	0 04 002	Month(1)	Month, 0
	0 04 003	Day (= 1) (1)	Day, 0
3 01 012	0 04 004	Hour (= 0) (1)	Hour, 0
	0 04 005	Minute (= 0) (1)	Minute, 0
		Horizontal and vertical coordinates	
3 01 021	0 05 001	Latitude (high accuracy)	Degree, 5
	0 06 001	Longitude (high accuracy)	Degree, 5
0 07 030		Height of station ground above mean sea level	m, 1
0 07 031		Height of barometer above mean sea level	m, 1
0 07 007		Height release of sonde above mean sea level	m, 0
		Monthly mean data	
0 04 023		Time period (= number of days in the month)	Day, 0
0 04 059		Times of observations used to compute the reported mean values	Flag table, 0
1 15 000		Delayed replication of 15 descriptors	
0 31 001		Delayed descriptor replication factor	Numeric, 0
0 08 001		Vertical sounding significance	Flag table, 0
0 08 023		First order statistics (= 4; mean value)	Code table, 0
0 07 004		Pressure	Pa, –1
0 10 009		Geopotential height	gpm, 0
0 12 101		Temperature/dry-bulb temperature	K, 2
0 12 103		Dew-point temperature	K, 2
0 08 023		First order statistics (= 32; vector mean)	Code table, 0
0 11 001		Wind direction	Degree true, 0
0 11 002		Wind speed	m s^{-1}, 1
0 08 023		First order statistics (= 63; missing value)	Code table, 0
0 11 019		Steadiness of wind	%, 0
0 08 050		Qualifier for number of missing values in calculation of statistic (= 2; temperature)	Code table, 0
0 08 020		Total number of missing entities (days)	Numeric, 0
0 08 050		Qualifier for number of missing values in calculation of statistic (= 9; wind)	Code table, 0
0 08 020		Total number of missing entities (days)	Numeric, 0

Note:

(1) The time identification refers to the beginning of the one-month period.

Regulations:

B/C 35.1 Section 1 of BUFR or CREX
B/C 35.2 Identification of launch site
B/C 35.3 Date/time (of the beginning of the one-month period)
B/C 35.4 Horizontal and vertical coordinates of launch site

B/C 35.5 Monthly mean data

B/C 35.5.1 Period of reference for monthly mean data
B/C 35.5.2 Times of observation used to compute the reported mean values
B/C 35.5.3 Number of reported pressure levels
B/C 35.5.4 Monthly mean data reported for a pressure level
B/C 35.6 Data required by regional or national reporting practices

B/C 35.1 Section 1 of BUFR or CREX

B/C 35.1.1 Entries required in Section 1 of BUFR

The following entries shall be included in BUFR Section 1:

-BUFR master table,
-identification of originating/generating centre,
-identification of originating/generating sub-centre,
-update sequence number,
-identification of inclusion of optional section,
-data category (= 002 for CLIMAT TEMP and CLIMAT TEMP SHIP data),
-international data sub-category (1), (2),
-local data subcategory,
-version number of master table,
-version number of local tables,
-year (year of the century up to BUFR edition 3) (3),
-month (for which the monthly mean values are reported) (3),
-day (= 1) (3),
-hour (= 0) (3),
-minute (= 0) (3).

Notes:

(1) Inclusion of this entry is required starting with BUFR edition 4.
(2) If required, the international data sub-category shall be included as follows:
= 025 for CLIMAT TEMP data,
= 026 for CLIMAT TEMP SHIP data.
(3) The time identification refers to the beginning of the one-month period for which the monthly mean values are reported.

B/C 35.1.2 Entries required in Section 1 of CREX

The following entries shall be included in CREX Section 1:

- CREX master table,
- CREX edition number,
- CREX table version number,
- version number of BUFR master table (1),
- version number of local tables (1),
- data category (= 002 for CLIMAT TEMP and CLIMAT TEMP SHIP data),
- international data sub-category (1), (2),
- identification of originating/generating centre (1),
- identification of originating/generating sub-centre (1),
- update sequence number (1),
- number of subsets (1),
- year (1), (3),
- month (for which the monthly mean values are reported) (1), (3),
- day (= 1) (1), (3),
- hour (= 0) (1), (3),
- minute (= 0) (1), (3).

Notes:
(1) Inclusion of these entries is required starting with CREX edition 2.
(2) If inclusion of international data sub-category is required, Note (2) under B/C 35.1.1 applies.
(3) Note (3) under B/C 35.1.1 applies.

B/C 35.2 Identification of launch site

WMO block number station (0 01 001) and WMO station number (0 01 002) shall be always included as a non-missing value in reports from land stations.

Ship identifier (0 01 011), if available, shall be included in reports from a sea station not exceeding 9 characters.

B/C 35.3 Date/time (of the beginning of the one-month period)

Date <3 01 011> and time <3 01 012> shall be reported, i.e. year (0 04 001), month (0 04 002), day (0 04 003) and hour (0 04 004), minute (0 04 005) of the beginning of the one-month period for which the monthly mean values are reported. Day (0 04 003) shall be set to 1 and both hour (0 04 004) and minute (0 04 005) shall be set to 0.

B/C 35.4 Horizontal and vertical coordinates of launch site

Latitude (0 05 001) and longitude (0 06 001) of the launch site shall be reported in degrees with precision in 10^{-5} of a degree.

Height of station ground above mean sea level (0 07 030) and height of barometer above mean sea level (0 07 031) shall be reported in meters with precision in tenths of a meter.

Height release of sonde above mean sea level (0 07 007) shall be reported in meters.

B/C 35.5 Monthly mean data

The monthly mean values of temperature, dew-point and wind data shall include information for station level (surface) and for standard levels 850, 700, 500, 300, 200, 150, 100, 50, and 30 hPa. Each of the levels shall be reported even if the monthly mean data are not available. Any missing element

shall be reported as a missing value. [75.4]

B/C 35.5.1 Period of reference for monthly mean data

Time period (0 04 023) represents the number of days in the month for which the monthly mean data are reported, and shall be expressed as a *positive value* in days.

Note:

(1) A BUFR (or CREX) message shall contain reports for one specific month only. [75.8]

B/C 35.5.2 Times of observation used to compute the reported mean values –

Flag table 0 08 059

This datum shall be used to specify the observation times used to compute the reported mean values:

(a) Bit No. 1 set to 1 indicates usage of data from 0000 UTC.
(b) Bit No. 2 set to 1 indicates usage of data from 0600 UTC.
(c) Bit No. 3 set to 1 indicates usage of data from 1200 UTC.
(d) Bit No. 4 set to 1 indicates usage of data from 1800 UTC.
(e) Bit No. 5 set to 1 indicates usage of data from other hours.

B/C 35.5.3 Number of reported pressure levels

The number of reported pressure levels shall be indicated by Delayed descriptor replication factor 0 31 001 in BUFR and by a four-digit number in the Data Section corresponding to the position of the replication descriptor in the Data Description Section of CREX.

Notes:

(1) The number of pressure levels shall never be set to a missing value.
(2) The number of pressure levels shall be set to a positive value in a NIL report.
(3) In compliance with Regulation B/C 35.5, the number of pressure levels shall be set to 10. If reporting of monthly mean data for additional levels is requested, the number of pressure levels shall be modified accordingly.

B/C 35.5.4 Monthly mean data reported for a pressure level

B/C 35.5.4.1 Vertical sounding significance – Flag table 0 08 001

This datum shall be used to specify vertical sounding significance in the following way:

(a) Bit No. 1 set to 1 indicates surface (station level).
(b) Bit No. 2 set to 1 indicates a standard level.
(c) All bits set to 1 indicate a missing value.

B/C 35.5.4.2 First order statistics – Code table 0 08 023

This datum shall be set to 4 (mean value) to indicate that the following entries represent mean values of the elements (pressure, geopotential height, temperature and dew-point temperature).

B/C 35.5.4.3 Monthly mean value of pressure

Monthly mean value of pressure (0 07 004) shall be reported in pascals (with precision in tens of a pascal).

Notes:

(1) The mean value of station-level pressure shall be reported in the first replication. It shall be the monthly mean value of station-level pressure data measured at the time of release of the radiosonde. [75.5]

(2) The values 85000, 70000, 50000, 30000, 20000, 15000, 10000, 5000, and 3000 Pa shall be reported in the other replications in compliance with Regulation B/C 35.5.

B/C 35.5.4.4 Monthly mean value of geopotential height

Monthly mean value of geopotential height of the level (0 10 009) shall be reported in geopotential meters.

B/C 35.5.4.5 Monthly mean value of temperature

Monthly mean value of temperature (0 12 101) shall be reported in degrees Kelvin (with precision in hundredths of a degree Kelvin); if produced in CREX, in degrees Celsius (with precision in hundredths of a degree Celsius). Temperature data shall be reported with precision in hundredths of a degree even if they are measured with the accuracy in tenths of a degree.

Notes:

(1) This requirement is based on the fact that conversion from the Kelvin to the Celsius scale has often resulted into distortion of the data values.

(2) Temperature t (in degrees Celsius) shall be converted into temperature T (in degrees Kelvin) using equation: $T = t + 273.15$.

(3) The mean value of station-level temperature shall be the monthly mean value of station-level temperature data measured at the time of release of the radiosonde. [75.5]

B/C 35.5.4.6 Monthly mean value of dew-point temperature

Monthly mean value of dew-point temperature (0 12 103) shall be reported in degrees Kelvin (with precision in hundredths of a degree Kelvin); if produced in CREX, in degrees Celsius (with precision in hundredths of a degree Celsius).

Note:

(1) Notes (1) and (2) under Regulation B/C 35.5.4.5 shall apply.

(2) The mean value of station-level dew-point temperature shall be the monthly mean value of station-level dew-point temperature data measured at the time of release of the radiosonde. [75.5]

B/C 35.5.4.7 First order statistics – Code table 0 08 023

This datum shall be set to 32 (vector mean) to indicate that the two following entries wind direction (0 11 001) and wind speed (0 11 002) represent the monthly mean vector wind.

B/C 35.5.4.8 Monthly mean vector wind

The wind direction (0 11 001) of the monthly mean vector wind shall be reported in degrees true and the wind speed (0 11 002) of the monthly mean vector wind shall be reported in meters per second (with precision in tenths of a meter per second).

Notes:

(1) The mean vector wind data shall be reported for all standard levels specified in Regulation B/C 35.5. [75.7.1]

(2) The mean vector wind data shall be reported as missing values for the station level.

B/C 35.5.4.9 Steadiness of wind

Steadiness of wind (0 11 019) at specified standard levels represents the ratio of speed of the monthly mean vector wind to the speed of the monthly mean scalar wind. It shall be reported in units of a percent.

Notes:

Steadiness of wind shall be reported for all standard levels specified in Regulation B/C 35.5.

(1) Steadiness of wind shall be reported as a missing value for the station level.

B/C 35.5.4.10 Number of days in the month for which temperature observations are missing

Number of days in the month for which temperature observations are missing for the specified standard level shall be reported using Total number of missing entities (0 08 020) being preceded by Qualifier for number of missing values in calculation of statistic (0 08 050) set to 2 (temperature).

B/C 35.5.4.11 Number of days in the month for which wind observations are missing

Number of days in the month for which wind observations are missing for the specified standard level shall be reported using Total number of missing entities (0 08 020) being preceded by Qualifier for number of missing values in calculation of statistic (0 08 050) set to 9 (wind).

B/C 35.6 Data required by regional or national reporting practices

No regional requirements are indicated for reporting CLIMAT TEMP and CLIMAT TEMP SHIP data in the *Manual on Codes*, WMO-No. 306, Volume II.

If national reporting practices require inclusion of monthly mean data at additional levels, these data shall be reported using sequence <3 09 054>. Note (3) under Regulation B/C 35.5.3 shall apply.

Note:

(1) A level determined by national decision shall be indicated by Vertical sounding significance 0 08 001 – all bits set to 0.

建议 7 (CBS-Ext.(06))

《全球资料加工和预报系统手册》（WMO-No.485）的修订

基本系统委员会,

注意到：

(1) 第 14 次世界气象大会含决议案的最终节略报告（WMO-No.960），

(2) 执行理事会第 57 次届会含决议案的最终节略报告（WMO-No.988），

(3) 执行理事会第 58 次届会含决议案的最终节略报告（WMO-No.1077），

(4) 三、四区协 EPS 产品使用培训研讨会（2005 年 1 月）会议报告，

(5) 二、五区协 EPS 产品使用培训研讨会（2005 年 4 月）会议报告，

(6) 一区协准备实施业务 NWP 国家研讨会（2005 年 9 月）会议报告，

(7) CBS/非核类紧急响应活动大气输送模拟 ET 会议（2005 年 9 月）报告，

(8) 全球长期预报制作中心研讨会（2005 年 10 月）会议报告，

(9) 一区协法语国家 GDPFS 产品业务应用研讨会（2005 年 11 月）会议报告，

(10) WMO 多种灾害、印度洋海啸预警系统早期预警中心业务概念研讨会（2005 年 11 月）会议报告，

(11) 灾害天气预报示范项目指导小组会议（2005 年 11 月）报告，

(12) 集合预报系统专家组会议（2006 年 2 月）报告，

(13) 长期预报（基础设施和检验）联合专家组会议（2006 年 4 月）报告，

(14) CBS 非核类紧急响应活动协调组会议（2006 年 5 月）报告，

(15) CBS 资料加工和预报系统实施协调组会议（2006 年 6 月）报告，

(16) 灾害天气预报示范项目（一区协子项目）会议（2006 年 8 月）报告，

(17) 二、四区协 GDPFS 产品和早期警报及紧急事故响应的 PWS 改进区域培训研讨会（2006 年 9 月）报告，

(18) 全球资料加工和预报系统（GDPFS）手册（WMO-No.485）；

考虑到：

(1) 有必要进一步阐明目前 GDPFS 手册中有关集合预报系统的内容，

(2) 有必要进一步阐明目前 GDPFS 手册中有关长期预报的内容，

(3) 有必要将用于指定全球长期预报制作中心以及那些已被指定的中心的标准纳入 GDPFS 手册，

(4) 有必要进一步阐明目前 GDPFS 手册中有关紧急响应活动的内容，

(5) 有必要将指定从事“环境紧急响应”活动专业化 RSMC 更名为“大气输送模拟”活动专业化 RSMC 纳入 GDPFS 手册，

(6) 有必要在 GDPFS 手册中纳入要求和提供大气输送模拟反向追溯、对 CTBT 检验的支持、向 NMHS 和相关国际组织提供其它环境事件支持的标准和程序，作为大气输送模拟（以前称为环境紧急响应）RSMC 活动专业化的一部分；

建议批准本建议附录中提出的对 GDPFS 手册（WMO-No.485）第一卷第 I、II 部分相关内容所作的修改，将修改后的内容载入将于 2007 年 7 月 1 日生效的 GDPFS 手册；

要求秘书长根据本建议附录中对 GDPFS 手册（WMO-No.485）作出相应的修改；

授权 CBS 主席与秘书长协商，对 GDPFS 手册（WMO-No.485）作出由此而产生的纯编辑上的修改。

Annex 1 to Recommendation 7 (CBX-Ext.(06))

PART 1

A. <u>Ensemble Prediction Systems</u>

A.1 Recommended amendment (new) to Vol. I, Part II, APPENDIX II-6

4.1 Ensemble prediction system products

4.1.1 Products for short range and medium range

New paragraph as follows:

(c) Other graphical products

Location-specific time series of Temperature, Precipitation, Wind speed, depicting the most likely solution and an estimation of uncertainty ("EPSgrams"). The definition, method of calculation, and the locations should be documented.

PART 2

A.2 Recommended amendment (revised) to Vol. I, Part II, Attachment II.7 (Table F)

Revised entire section III – Standard Verification Measures of EPS, as follows:

III – STANDARD VERIFICATION MEASURES OF EPS

EXCHANGE OF SCORES
Monthly exchanges:

Ensemble mean
For verification of ensemble mean, the specifications in this table of the attachment for variables, levels, areas and verifications should be used.

Spread
Standard deviation of the ensemble averaged over the same regions and variables as used for the ensemble mean.

Probabilities
Probabilistic scores are exchanged in the form of reliability tables. Details of the format of the reliability tables are provided on the website of the Lead Centre for verification of EPS.

List of parameters
PMSL anomaly ± 1, ± 1.5, ± 2 standard deviation with respect to a centre-specified climatology. Verified for areas defined for verification against analysis.

Z500 with thresholds as for PMSL. Verified for areas defined for verification against analysis.

850 hPa wind speed with thresholds of 10, 15, 25 m s^{-1}. Verified for areas defined for verification against analysis.

850 hPa u and v wind components with thresholds of 10th, 25th, 75th and 90th percentile points with respect to a centre-specified climatology. Verified for areas defined for verification against analysis.

250 hPa u and v wind components with thresholds of 10th, 25th, 75th and 90th percentile points with respect to a centre-specified climatology. Verified for areas defined for verification against analysis.

T850 anomalies with thresholds ± 1, ± 1.5, ± 2 standard deviation with respect to a centre-specified climatology. Verified for areas defined for verification against analysis.

Precipitation with thresholds 1, 5, 10, and 25 mm/24 hours every 24 hours verified over areas defined for deterministic forecast verification against observations.
Observations for EPS verification should be based on the GCOS list of surface network (GSN).

NOTE: Where thresholds are defined with respect to climatology, the daily climate should be estimated.

Scores
Brier Skill Score (with respect to climatology) (see definition below*)
Relative Operating Characteristic (ROC)
Relative economic value (C/L) diagrams
Reliability diagrams with frequency distribution

NOTE: Annual and seasonal averages of the Brier Skill Score at 24, 72, 120, 168 and 240 hours for Z500 and T850 should be included in the yearly Technical Progress Report on the Global Data-processing and Forecasting System.

Annex 2 to Recommendation 7 (CBX-Ext.(06))

PART 1

B. <u>Long-Range Forecasts</u>

B.1 Recommended amendment (new) to Vo. I, Part II, paragraph 1.4.1.2 (b)
Add following note :

1) Centres producing global long-range forecasts, and recognized as such by CBS, are called Global Producing Centres for Long-range forecasts (GPCs). The criteria to be recognized as a GPCs and the list of official recognized GPCs can found in APPENDIX II-8.

PART 2

B.2 Recommended amendment (new) to Vol. I, Part II, APPENDIX II-8

In order to be officially recognized as a GPC (Global Producing Centre of Long-range forecasts), a centre must as a minimum adhere to the following criteria:

- Fixed production cycles and time of issuance;
- Provide a limited set of products as determined by the APPENDIX II-6 of this Manual;

- Provide verifications as per the WMO SVSLRF;
- Provide up-to-date information on methodology used by the GPC;
- Make products accessible through the GPC Website and/or disseminated through the GTS and/or Internet.

Centres that are designated as Global Producing Centres for Long-range Forecasts are as follows: Melbourne, Montreal, Beijing, Toulouse, Tokyo, Seoul, Exeter, Washington and ECMWF.

PART 3

B.3 Recommend amendment (revised) to Vol. I, Part II, APPENDIX II-6

"Minimum list of LRF products to be made available by global scale producing centres"

1.Forecast Products

Note: it is recognized that some centres may provide more information than the list including for example daily data or hind cast data.

Basic properties

Temporal resolution.

Averages, accumulations or frequencies over 1-month or longer periods (seasons)

Spatial resolution.
2.5° x 2.5° (note: selected to match resolution of current verification data)

Spatial coverage. **Global**
(separate areas of interest to users, down to sub-regions of a continent or ocean basin, may be provided on special request from Members)

Lead time. ~~**0-4 months for seasonal forecasts.**~~ **Any leadtimes between 0, and 4 months (**definition of lead time: for example, a three-monthly forecast issued on 31 December has a lead time of 0 months for a January-to-March forecast, and a lead time of 1 month for February-to-April forecast, etc.)

Issue frequency. **Monthly or at least quarterly**

Output types. Either rendered images (eg forecast maps and diagrams) or digital data.. GRIB-2 format should be used for products posted on FTP-sites or disseminated through the GTS.

Indications of skill including hind cast **should be provided**, in accordance with recommendations from CBS on the Standardised Verification System (Attachments II-8). The minimum required is level 1 and level 2 verification. The verification of Nino3.4 index will only apply to those centres producing such indices. However GPCs are encouraged to provide level 3 verification. Verification results over the hindcast period are mandatory.

Content of basic forecast output: (some products are intended as directly meeting NMS requirements with regard to information needed for end-user applications [direct or further processed]; others are to assist the contributing global centres in product comparison and in the development of multimodel ensembles. These products are regarded as feasible from current systems).

A. Calibrated outputs from ensemble prediction system showing the mean and spread of the distribution for:
   - 2 metre temperature over land
   - sea surface temperature
   - precipitation
   - Z500, MSLP, T850

Notes:

1. These fields are to be expressed as departures from normal model climate.

B. Calibrated probability information for forecast categories.

- 2 metre temperature over land
- SST (Atmospheric coupled models only)
- Precipitation

Notes:

- B is the minimum requirement. A should be provided, at least, by request.
- **Tercile categories should be provided**, consistent with present capabilities. Information for larger numbers of categories (e.g. deciles) is foreseen, however, as capabilities increase and to match better the anticipated end-user requirements. These targets are implied also for forecasts from statistical/empirical models.
- **Information on how category boundaries are defined should be made available.**
- "Calibrated" implies correction based on systematic errors in model climatology, using at least 15 years of retrospective forecasts.

PART 4

B.4 Recommended amendment (revised) to Vol. I, Part II, Attachment II-8

"Standardized Verification System (SVS) for Long-range Forecasts (LRF)"

In Executive Summary:
Add:

1.5 Exchange of verification information

The SVSLRF verification results are made available through a website maintained by the Lead Centre. The functions of the Lead Centre for SVSLRF include creating and maintaining coordinated Websites for the LRF verification information so that potential users would benefit from a consistent presentation of the results. The address of the website is http://www.bom.gov.au/wmo/lrfvs/.

In : 3. Parameters

The key list of parameters in the Core SVS is provided below. Any verification for these key parameters should be assessed using the Core SVS techniques wherever possible. Many long-range forecasts are produced which do not include parameters in the key list (for example, there are numerous empirical systems that predict seasonal rainfall over part of/or over an entire, country). The Core SVS diagnostics should be used to assess these forecasts also, but full details of the predictions will need to be provided.

Add:

Forecast can be made using different levels of post-processing typically no-post-processing (raw or uncalibrated), simple correction of systematic errors (calibrated, i.e. calibration of mean and of variance) and more complex correction using hindcast skill (recalibrated, e.g. Model Output Statistics or perfect prog approaches). Most centres are currently issuing forecasts resulting from a simple calibration and so for sake of comparison on the Lead Centre website scores for forecasts that were raw or calibrated (as specified in respective skill score section) are to be submitted. At the moment the team prefer to exclude forecast that were recalibrated, but GPCs are encouraged to apply the SVSLRF methodology and to display the results on their recalibrated forecasts on their website.

3.1 Level 1: Diagrams and scores to be produced for regions

Diagrams (e.g. ROC and reliability curves) are to be supplied in digital format as specified on the Lead Centre website.

IN MAIN TEXT:

In 3. SVS for Long-Range Forecasts, Add at the beginning:

Forecast can be made using different levels of post-processing typically no-post-processing (raw or uncalibrated), simple correction of systematic errors (calibrated, i.e. calibration of mean and of variance) and more complex correction using hindcast skill (recalibrated, e.g. Model Output Statistics or perfect prog approaches). Most centres are currently issuing forecasts resulting from a simple calibration and so for sake of comparison on the Lead Centre website scores for forecasts that were raw or calibrated (as specified in respective skill score section) are to be submitted. At the moment the team prefer to exclude forecast that were recalibrated, but GPCs are encouraged to apply the SVSLRF methodology and to display the results on their recalibrated forecasts on their website.

Amend 3.1.4 as:

The following gives a summary of parameters, validation regions and diagnostics that form the core SVS. The required periods, lead-times and stratification against the state of ENSO are given in section 3.2.

The number of realisations of LRF is far smaller than in the case of short term numerical weather prediction forecasts. Consequently it is essential as part of the core SVS, to calculate and report error bars and level of significance (see section 3.3.5).

In order to ease implementation, participating LRF producers may stage the introduction of the core SVS by prioritizing implementation of verification at levels 1 and 2.

Other parameters and indices to be verified as well as other verification scores can be added to the core SVS in future versions.

In 3.3.1 amend the following table as:

⇒ MSSS, provided as a single bulk number, is mandatory for level 1 verification in the core SVS. MSSS together with its three term decomposition are also mandatory for level 2 verification in the core SVS. For the exchange of scores via the Lead Centre website the MSSS and its decomposition term should be calculated using the raw forecasts and preferably not the calibrated ones.

In 3.3.5 Level of significance

MSSS

Amend table as:

⇒ Level of significance will be mandatory in the core SVS once guidelines for calculation have been established for the complete suite of scores. A phased in introduction of level of significance in the SVS may be used (see section 3.1.4).

In 3.4 Hind casts amend first paragraph as:

In contrast to short- and medium-range dynamical Numerical Weather Prediction (NWP) forecasts, LRF are produced relatively few times a year (for example, one forecast for each season or one forecast for the following 90-day period, issued every month). Therefore the verification sampling for LRF may be limited, possibly to the point where the validity and significance of the verification results may be questionable. Providing verification for a few seasons or even over a few years only may be misleading and may not give a fair assessment of the skill of any LRF system. LRF systems should be verified over as long a period as possible in hind cast mode. Although there are limitations on the availability of verification data sets and in spite of the fact that validating numerical forecast systems in hind cast mode requires large computer resources, the hind cast period should be as long as possible. The recommended period for the exchange of scores is advertised on the Lead Centre website (http://www.bom.gov.au/wmo/lrfvs/).

Add in last array:

⇒ Verification results over the hindcast period are mandatory for the exchange of LRF verification scores. Producing centres have to send new hindcast verification results as soon as their forecast system is changed.

In 4. VERIFICATION DATA SETS amend as:

The same data should be used to generate both climatology and verification data sets, although the forecast issuing Centres/Institutes own analyses or reanalyses and subsequent operational analyses may be used when other data are not available.

Many LRF are produced that are applicable to limited or local areas. It may not be possible to use the data in either the recommended climatology or verification data sets for validation or verification purposes in these cases. Appropriate data sets should then be used with full details provided.
Verification should be done using the recommended data sets as listed on the Lead Centre website (http://www.bom.gov.au/wmo/lrfvs/).

Amend as:

Create, develop and maintain website (the "SVSLRF website") to provide access to the LRF verification information. The address of the website is http://www.bom.gov.au/wmo/lrfvs/. The website will:

(i) Provide access to standardized software for calculating scoring information (ROC curves, areas, contingency table scores, hit rates, …).

(ii) Provide consistent graphical displays of the verification results from participating centres through processing of digital versions of the results;

(iii) Contain relevant documentation and links to the websites of global-scale producing centres;

(iv) Provide some means for the collection of feedback from NMHSs and RCCs on the usefulness of the verification information;

(v) Contain information and, preferably, provide access to available verification data sets;

6.1.2 The centre will also:

(i) Produce monthly verification data sets in common format on 2.5° x 2.5° grid where appropriate;

(ii) Liaise with other groups involved in verification (e.g. WGSIP, CCl, etc.) on the effectiveness of the current standardised verification system (SVS) and identify areas for future development and improvement;

(iii) Provide periodic reports to CBS and other relevant Commissions assessing the effectiveness of the SVS**.**

(iv) Facilitate the availability of information to assess the skill of long-range forecasts but not to provide a direct inter-comparison between the GPCs' models.

6.1.3 Detailed tasks of the "lead centre":

Annex 3 to Recommendation 7 (CBX-Ext.(06))

C. Emergency Response Activities

C.1 Recommended amendment (revised) to Vol. I, Part II, APPENDIX II-7:

o "Users Interpretation Guide for Atmospheric Transport Model Products provided by RSMCs".

(Introductory section, second paragraph)

"The International Atomic Energy Agency (IAEA) requests support from WMO RSMCs for atmospheric transport modelling products by using the form agreed between WMO and IAEA. The IAEA then sends the completed form immediately, by fax and by e-mail (preferred), to the RSMCs as per the regional and global arrangements and ensures receipt of the form by phone. The Lead-RSMCs shall confirm receipt of the IAEA request by fax or e-mail (preferred) to IAEA. This will initiate a joint response from the RSMCs in their region of responsibility. The IAEA sends an information copy of its Request Form by fax or by e-mail (preferred) to RTH Offenbach." When the Lead-RSMC's products become available, the Lead-RSMCs shall send an announcement to the IAEA that their respective products are available and the products' location (RSMC's dedicated website), by fax or by e-mail (preferred)."

o "ENVIRONMENTAL EMERGENCY RESPONSE REQUEST FOR WMO RSMC SUPPORT BY IAEA"

Environmental Emergency Response

Request for WMO RSMC Support by IAEA

The IAEA sends the completed form by fax to all RSMCs and RTH Offenbach.
At the same time the IAEA calls the 'Lead' RSMCs (selected on the form) to ensure receipt of this form.

Date/Time of Request: yyyy-MM-dd/HH:mm(UTC)

STATUS: ☐ **EMERGENCY** ☐ **EXERCISE**

REQUESTED RSMCs: (indicate the lead RSMCs by a checkmark below)

☐ EXETER ☐ TOULOUSE ☐ MELBOURNE ☐ MONTREAL ☐ WASHINGTON

☐ BEIJING ☐ TOKYO ☐ OBNINSK ☒ RTH Offenbach

SENDERS NAME :**INTERNATIONAL ATOMIC ENERGY AGENCY**

COMMUNICATION DETAILS:	Tel .: +43 1 2600 22023	use to confirm receipt of request
	Fax: +43 1 26007 29309	use to confirm receipt of request
	Email: eru3@iaea.org	use to confirm receipt of request

NAME OF RELEASE SITE AND COUNTRY (facility and place)

GEOGRAPHICAL LOCATION OF RELEASE: . decimal degrees ☐ N ☐ S
(MUST BE COMPLETED) . decimal degrees ☐ E ☐ W

DECLARED EMERGENCY CLASS:

☐ NONE ☐ other, specify:

ACTION REQUIRED:

☐ NONE

☐ GO ON STANDBY (request for products or for assistance on weather conditions is to be expected)

☐ GENERATE STANDARD PRODUCTS AND SEND TO IAEA ONLY

☐ GENERATE STANDARD PRODUCTS FOR THE IAEA AND REGIONAL DISTRIBUTION

☐ OTHER ACTION:

(essential accident information for model simulation - if not available, model will execute with standard default values)

RELEASE CHARACTERISTICS:

START OF RELEASE: Date/Time:　- - / : (UTC)

DURATION:　(hours) or END OF RELEASE: Date/Time:　- - / : (UTC)

RADIONUCLIDE SPECIES:

TOTAL RELEASE QUANTITY:　(Becquerel)

OR POLLUTANT RELEASE RATE:　(Becquerel/hour)

EFFECTIVE HEIGHT OF RELEASE: ☐ surface　or

☐ stack height:　(m),　or

☐ aloft:top:　(m),　base:　(m)

(helpful information for improved simulation)

SITE ELEVATION:　(m)

LOCAL METEOROLOGICAL CONDITIONS NEAR ACCIDENT:

(wind speed and direction/weather/cloudiness/precipitation, etc.)

OTHER INFORMATION:

(nature of accident, cause, fire explosion, controlled release, foreseeable development, normal activity, projected conditions, etc)

(to be completed by RSMC)

DATE/TIME OF RECEIPT OF REQUEST: .....(UTC)

FOR LEAD RSMC(s) ONLY
DATE/TIME OF RETURN CONFIRMATION OF RECEIPT: .....(UTC)

Note: All times in UTC

C.2　Recommended amendment (revised) to Vol. I, Part I, paragraph 4.1.2

4.1.2.2Centres with activity specialization

The functions of RSMCs with activity specialization shall include, inter alia:

(a) Providing long-, extended- and/or medium-range forecasting products;

(b) Providing advisories for tropical cyclones, severe storms and other dangerous weather phenomena;

(c) Providing tailored specialized products to service users in a particular area;

(d) Providing trajectories and atmospheric transport modelling products, including backtracking, in case of environmental emergencies or other incidents;

(e) Providing information on prolonged adverse weather conditions, including drought monitoring;

(f) Undertaking activities related to the WCP and other WMO international programmes. This includes providing climate diagnostic, climate analysis and prediction products to assist in climate monitoring.

4.1.2.3RSMCs shall also carry out verification and intercomparison of products and arrange regional workshops and seminars on centres' products and their use in national weather forecasting. RSMCs with geographical and activity specialization shall be co-located where possible.

4.1.2.4RSMCs designated by WMO for the provision of atmospheric transport model products shall implement the Regional and Global Arrangements and related procedures as found in APPENDIX I-3,and/or backtracking in APPENDIX I-6, respectively.

4.1.2.5The designated WMCs and RSMCs are given in APPENDIX I-1 and the procedures for broadening the functions of existing RSMCs and for designating new RSMCs are given in APPENDIX I-2. ~~APPENDIX~~

NOTE:Guidelines to review the status of RSMCs with geographical specialization are given in Attachment I.1.

C.3 Recommended amendment (revised) to Vol. I, Part I, APPENDIX I-1

APPENDIX I-1

LOCATION OF WMCs AND RSMCs WITH GEOGRAPHICAL SPECIALIZATION AND RSMCs WITH ACTIVITY SPECIALIZATION

1.The WMCs are located at:
Melbourne (southern hemisphere only)
Moscow
Washington

2.The RSMCs with geographical specialization are located at:

Algiers	Khabarovsk	Pretoria
Beijing	Melbourne	Rome
Exeter	Miami	Tashkent
Brasilia	Montreal	Tokyo
Buenos Aires	Moscow	Tunis/Casablanca
Cairo	Nairobi	Washington
Dakar	New Delhi	Wellington
Darwin	Novosibirsk	
Jeddah	Offenbach	

Broadened RSMC functions:

Offenbach — Provision of ultraviolet-index forecasts for Region VI (Europe)

3.The RSMCs with activity specialization are the following:

RSMC Nadi – Tropical Cyclone Centre

RSMC New Delhi – Tropical Cyclone Centre

RSMC Miami – Hurricane Centre

RSMC Tokyo – Typhoon Centre

RSMC La Réunion – Tropical Cyclone Centre

RSMC Honolulu – Hurricane Centre

RSMC European Centre for Medium Range Weather Forecasts (RSMC ECMWF)

Provision of atmospheric transport modelling (for environmental emergency response and/or backtracking)

RSMC Beijing	RSMC Obninsk
RSMC Exeter	RSMC Tokyo
RSMC Melbourne	RSMC Toulouse
RSMC Montreal	RSMC Washington

C.4 Recommended amendment to Vol. I, Part II, paragraphs. 1.4.1.2 (revised), 5.3.10 (revised), 5.3.11 (new)

1.4.1.2 Regional Specialized Meteorological Centres (RSMCs) with activity specialization

Regional Specialized Meteorological Centre (RSMC) with activity specialization shall be designated, subject to the formal commitment by a Member or group of cooperating Members, to fulfil the required functions of the centre and meet the requirements for the provision of WWW products and services initiated and endorsed by the relevant WMO constituent body or bodies concerned. The centre should be capable of preparing independently or with the support of WMCs, and where appropriate, other GDPFS centres and disseminating to Members concerned:

(a) Global medium-range forecasts and related analyses;

(b) Extended- and long-range weather forecasts and related mean analysed values and anomalies;

(c) Tropical cyclone warnings and advisories, storm position, intensity and track forecasts for their areas;

(d) Three-dimensional atmospheric transport modelling products including trajectories, integrated pollutant concentration, and total deposition for environmental emergency response; atmospheric backtracking modelling products;

(e) Drought monitoring products such as drought indices.

5.3.10 Standards in the provision of international services by Regional Specialized Meteorological Centres (RSMC) for atmospheric transport modelling, in radiological environmental emergency response

5.3.10.1 The designated RSMCs with activity specialization in this field shall implement agreed standard procedures and products.

NOTE: Standards in the provision of international services by RSMCs for atmospheric transport modelling, for radiological environmental emergency response are given in APPENDIX II-7.

5.3.11 Standards in the provision of international services by Regional Specialized Meteorological Centres (RSMC) for atmospheric transport modelling in backtracking

5.3.11.1 The designated RSMCs with activity specialization in this field shall implement agreed standard procedures and products.

NOTE: Standards in the provision of international services by RSMCs for CTBT Verification support are given in APPENDIX II-9.

Annex 4 to Recommendation 7 (CBX-Ext.(06))

C.5 Recommended amendment (new) to Vol. I, Part I, APPENDIX I-6

APPENDIX I-6

REGIONAL AND GLOBAL ARRANGEMENTS FOR ATMOSPHERIC BACKTRACKING

NOTIFICATION

In the framework of the cooperation agreement between CTBTO and WMO that entered into force on July 11th, 2003, the (Provisional) Technical Secretariat ((P)TS) notifies the RSMCs designated for the provision of atmospheric backtracking products and the WMO Secretariat in case that anomalous Radionuclide measurements occur in the International Monitoring System. The notification will be in the form of an electronic mail message that will specify the coordinates of the requested stations as well as start and stop of the measurements. The measurement scenario will not be revealed.

Global arrangements for all RSMCs to distribute the products to CTBTO

1.All notified RSMCs shall acknowledge the receipt of the request and deliver the requested atmospheric backtracking products in electronic form and in the predefined format to a server specified by CTBTO/PTS as part of the notification;

2.The products shall be delivered as fast as technically possible within defined timelines;

3.Every participating RSMC that is temporarily unable to honour the request should notify CTBTO/PTS and the WMO Secretariat as soon as possible, but in any case within 24 hours. The contact officer from side of the PTS is specified on the electronic mail message;

4.Requests for support from the PTS are considered confidential and must not be disclosed.

REGIONAL ARRANGEMENTS FOR ONE OR MORE RSMCS TO DISTRIBUTE PRODUCTS TO AN NMHS

If support is required for response to an incident requiring backtracking using atmospheric transport models, then the Permanent Representative with WMO, or the person authorised of the requesting country may direct its request for support to the operational contact point of the designated RSMC(s) for its Regional Association.

1.The RSMC shall consider each request with regard to its capabilities and the suitability of its products to address the requirements and will then respond accordingly.

2.The RSMC shall inform the WMO Secretariat of the request and the agreed actions, and may inform all other designated RSMC’s of the request.

3.The RSMC products will be provided to the NMS Operational Contact Point designated by the Permanent Representative.

C.6 Recommended amendment (new) to Vol. I, Part II, APPENDIX II-9

"Products Provided by RSMCs with Activity Specialization in Atmospheric Transport Modelling (Backtracking for CTBT Verification Support)"

APPENDIX II-9

PRODUCTS PROVIDED BY RSMCS WITH ACTIVITY SPECIALISATION IN ATMOSPHERIC TRANSPORT MODELLING (BACKTRACKING FOR CTBT VERIFICATION SUPPORT)

The CTBTO (Provisional) Technical Secretariat requests support from WMO Regional Specialized Meteorological Centres (RSMC) for atmospheric transport modelling (backtracking) products by using an electronic mail message with subject line "====== PTS REQUEST FOR SUPPORT ======" to all RSMCs. This will initiate a response from all the RSMCs.

The designated RSMCs shall

a) Mail back the response form to the responsible officer at the PTS within 3 hours

b) Conduct standardized backtracking computations according to the specifications listed below for all measurements included in the notification message

c) Upload the results on a secured ftp server, as defined in the notification message, within 24 hours of reception and according to the format as defined below

The specifications for the backtracking are as follows:

- Simulate a release of 1.3 10^{15} Bq of a tracer integrated backward in time (no deposition, no decay) at a constant rate at the point of the station location from surface to 30 m from measurement stop to measurement start.
- Calculate the respective (backward) tracer concentrations [in Bq/m^3] at a global 1x1 degree grid, output frequency 3 hours, time average of output 3 hours, from surface to 30 m.
- Simulate backwards in time to the requested ending date/time (usually 6-14 days from sample collection stop)

The PTS shall

a) Restrict requests to cases of anomalous radionuclide measurements or system tests

b) Contact the RSMCs in case no confirmation of a request was received within 3 hours

c) Conduct regular announced and/or unannounced system tests

d) Share the results of tests with the other RSMCs at a website

The (P)TS will not request any graphical or products other than specified above. Customized end-user products will be produced by the (P)TS for submission to the National Authorities, along with RSMC model output. Measurements and end-user products will not be shared by the (P)TS with the RSMCs or the WMO secretariat for reasons of confidentiality.

NOTIFICATION MAIL MESSAGE SENT OUT BY THE PTS TO WMO RSMCs

====== PTS REQUEST FOR SUPPORT =====

Date issued: YYYYMMDD hhmm

Responsible officer: NAME

Point of contact:

NAME

Tel. ……

Fax. …….

name@****.***

Secure Website (location/user/password)

Download of information:

****://**********

username

Password

Data upload:

****://**********

Username

Password

For authentication purposes, this mail message is also available

on the website:

****://**********.txt

==========

Source-receptor matrix results are requested for

005

stations

LON LAT ID Measurement Start/stop time (YYYYMMDD hh)

001 -70.90 -53.10 CLP18 20050328 15 20050329 15

002 -70.90 -53.10 CLP18 20050329 15 20050330 15

003 -71.25 -41.10 ARP03 20050329 12 20050330 12

004 -58.47 -34.54 ARP01 20050329 18 20050330 18

005 -70.90 -53.10 CLP18 20050330 15 20050331 15

==========

Please calculate backward to

YYYYMMDD hh

==========

Please upload data within

24

hours

==RESPONSE FORM==========

=== WMO Centre response form ===

=== Please send back this form ===

=== to the sender of the request as ===

=== soon as possible ===

==========

(x) We will send our contributions within the time limit (default)

( ) We will send our contributions kkk hours later then the time limit

( ) We got your request but are not able to perform computations

==========

====== PTS REQUEST FOR SUPPORT =====

FORMAT OF THE MODEL RESULTS AS DELIVERED BY THE RSMCs

Line 1: Header Line (Station longitude, latitude, start of measurement interval (YYYYMMDD hh), end of measurement interval (YYYYMMDD hh), release strength (Bq), number of hours backward, output every “k” hours, time average of output, Station Name)

Line 2-k: data lines (latitude, longitude, time step number, value)

```
17.57 59.23 20030106 09 20030107 09 0.13E+16 144 3 3 1.00 1.00 "SEP63"
 58.00 15.00 1 0.1209120E-01
 59.00 15.00 1 0.6446140E-01
 60.00 15.00 1 0.3212887E-02
 58.00 16.00 1 0.2649441E+01
 59.00 16.00 1 0.9029172E+01
 60.00 16.00 1 0.7616042E-01
 58.00 17.00 1 0.1073919E+02
 59.00 17.00 1 0.3082339E+02
 60.00 17.00 1 0.1408468E-01
 58.00 18.00 1 0.2643455E+00
 59.00 18.00 1 0.7357535E+00
 58.00 14.00 2 0.7759376E-02
 59.00 14.00 2 0.6508716E-01
 60.00 14.00 2 0.2403110E-01
 61.00 14.00 2 0.6662516E-03
 62.00 14.00 2 0.2838572E-04
 58.00 15.00 2 0.1015775E+01
 59.00 15.00 2 0.5030275E+01
 60.00 15.00 2 0.8239139E+00
 61.00 15.00 2 0.6797127E-02
 62.00 15.00 2 0.6521360E-04
 58.00 16.00 2 0.8181147E+01
 59.00 16.00 2 0.2503959E+02
 60.00 16.00 2 0.5937406E+00
 61.00 16.00 2 0.1784474E-02
 58.00 17.00 2 0.1403705E+02
 59.00 17.00 2 0.3715418E+02
 60.00 17.00 2 0.1306086E-01
 58.00 18.00 2 0.2718492E+00
 59.00 18.00 2 0.7555131E+00
```

建议 8 (CBS-Ext.(06))

长期预报全球制作中心的指定

基本系统委员会，

注意到：

(1) 《第 14 次世界气象大会含决议案的最终节略报告》（WMO-No.960），

(2) 《执行理事会第 57 次届会含决议案的最终节略报告》（WMO-No.988），

(3) 《执行理事会第 58 次届会含决议案的最终节略报告》（WMO-No.1007），

(4) 全球长期预报制作中心研讨会会议报告（2005 年 10 月），

(5) 长期预报联合专家组会议报告（基础设施和检验）（2006 年 4 月），

(6) CBS 资料加工和预报系统实施协调组会议报告（2006 年 6 月），

(7) 《全球资料加工和预报系统手册》（GDPFS）（WMO-No.485），

考虑到：

(1) 需要指定长期预报全球制作中心（GPC-LRF），

(2) 下列气象中心：墨尔本、蒙特利尔、北京、图卢兹、东京、首尔、华盛顿、埃克塞特和 ECMWF 提供长期预报的必要产品及业务服务，

建议指定下列气象中心：墨尔本、蒙特利尔、北京、图卢兹、东京、首尔、华盛顿、埃克塞特和 ECMWF 作为长期预报全球制作中心（GPC），于 2007 年 7 月 1 日生效；

要求：

(1) 运行指定的 GPC 的会员根据需要向 WMO 有关会员的 NMC 和 RCC 提供其长期预报产品，并与 WMO 的有关计划协调此类活动；

(2) 秘书长在执行理事会批准该建议后，立即安排将新指定的 GPC 载入《GDPFS 手册》。

建议 9 (CBS-Ext.(06))

审议执行理事会基于基本系统委员会以往建议的决议或有关世界天气监视网的决议

基本系统委员会,

满意地**注意到**执行理事会对基本系统委员会以往建议或总体上与世界天气监视网计划有关的建议所采取的行动，

考虑到执行理事会一些以往的决议仍然有效，

建议执行理事会的以下决议保留有效：

决议 14 和 15 (EC-55)、决议 2 和 9 (EC-56)、决议 2 (EC-57（建议 1 (CBS-13)）、决议 3、13 和 15 (EC-58)；

建议执行理事会的以下决议不再保留有效：

决议 12 (EC-55)、决议 2 (EC-57 (建议 2—7 (CBS-13)、建议 1 (CBS-05))、决议 2 (EC-58)。

附　录

附录 I

总摘要第 6.2.78 段的附录

电码过渡安排

类型 →	类型 1：　通用	类型 2：卫星观测	类型 .3：航空[1]	类型 4：海事	类型 5[2]：其它	类型 6[2]：基本废弃
传统码格式列表 *进度* ↓	SYNOP SYNOP MOBIL PILOT PILOT MOBIL TEMP TEMP MOBIL TEMP DROP CLIMAT CLIMAT TEMP	SAREP SATEM SARAD SATOB	METAR SPECI TAF AMDAR ROFOR	BUOY TRACKOB BATHY TESAC WAVEOB SHIP CLIMAT SHIP PILOT SHIP TEMP SHIP CLIMAT TEMP SHIP	RADOB IAC IAC FLEET GRID*(to GRIB)* RADOF	CODAR ICEAN GRAF NACLI etc. SFAZI SFLOC SFAZU RADREP ROCOB ROCOB SHIP ARFOR WINTEM MAFOR HYDRA HYFOR
开始试验交换[3]	**2002 年 11 月某些资料** (AWS SYNOP, TEMP USA)	目前在一些中心	**2006 年** **2002 年**一些中心的 AMDAR	**2005 年** **2003** 年 用于 Argos 资料(BUOY, 水下浮筒, XBT/XCTD)	**2004 年**	不适用
开始业务交换[3]	**2005 年 11 月**	目前在一些中心	**2008 年** **2003 年** AMDAR	**2007 年** **2003** 用于 Argos 资料 (BUOY, 水下浮筒, XBT/XCTD)	**2006 年**	不适用
过渡完成	**2010 年 11 月**	**2006 年 11 月**	**2016 年** **2005 年** AMDAR	**2012 年** **2008** 年用于 Argo 资料 (BUOY, 水下浮筒, XBT/XCTD)	**2008 年**	不适用

注解：

(1)除 AMDAR 之外，航空电码需要 ICAO 协调和批准。

(2)　对第五类电码需要进行审查，以决定是否应当将其过渡到 BUFR/CREX 。第六类电码不过渡。

(3) 上述所有的日期均指“不迟于”该日期。但鼓励所有会员和组织开始试验性资料交换，如果实现了所有的相关条件（见下），将尽快开始向业务过渡。

- 开始试验交换：BUFR (CREX)形式的资料将可提供，但未业务化，即：目前使用的字母数字电码仍然作为业务使用。

- 开始业务交换： BUFR (CREX)形式的资料将可提供，部分(不是全部)会员在业务上依赖这些资料。目前字母数字电码仍然使用(并行分发)。

- 完成过渡：在此日期BUFR (CREX)交换成为标准的WMO 规范。并行分发将中止。出于存档目的以及使用BUFR (CREX)有问题的地方，字母数字电码只能在当地使用。

试验交换开始前需满足的条件：

- 拥有相关的 BUFR/CREX 表和模板；

- 已完成相关测试方的培训

- 已使用所需的测试方的软件（编码、解码和显示）；

业务交换开始前需满足的条件：

- 相关 BUFR/CREX 表和模板得到全面检验；

- 已完成所有相关方的培训

- 所有要求的软件(编码、解码和收看)均实现业务化。

附录 II

总摘要第 6.3.35 段的附录

GPC 的其它 LRF 资料和产品

1. GPC 提供的用户要求的试验产品

- 1 至 3 个月周期的平均值、累积值和频率。
- 超过某些临界值的概率（如，超出临界值范围的季节性降雨总量）。
- 极端气候距平的风险，它有助于提供特定地区发生热浪和寒潮的警报。
- 干旱、季风等的广义预报指数。
- 干和湿持续时间：频率和持续时间（1 个月提前时间量）。
- 主要雨季开始的可能时间（在某个地区，如南亚、东亚、南部非洲、GHA 等）。
- 有必要表示首月（无提前时间量）平均值。

2. 选择 GRIB 2 格式的 GPV（格点值）产品而非 NetCDF，尤其是降尺度。要求如下：

- 降尺度算法的预报资料；这或许需要月平均一外的数据，如：
  - 每日变率统计
  - 某些或全部集合成员的距平
  - 后预报资料
- RCM 边界条件和初始条件资料（包括 SST 资料）。
- 计算区域专门指数资料（干旱）。
- 地面和高空参数分析场供经验模式使用，作为预报因子。
- SST 全球观测和预报周值。
- 用于整个季节监测的每日卫星降水分析。

3. 区域气候中心/NMC 可能不具备长期预报各方面的专业知识。他们在下列主要领域需要得到 GPC 的培训帮助：

- GPC LRF 产品的判读和使用
- 降尺度技术（统计和动力学的技术）
- 检验技术（地方检验 RCC 制作的产品和应用产品）
- 促进地方用户应用 RCC 的降尺度产品
- 使用和实施区域气候模式。

附录 III

总摘要第 7.8 段的附录

建议的 GISC 和 DCPC 指定程序

1.　GISC 的指定程序

1.1　GISC 的指定程序由四个步骤组成，即：

i)　各项计划的代表机构提出对 WIS 的需求及它们对各项需求的认可

WMO 技术委员会和其他代表参加计划的机构说明它们对 WIS 服务的需求，并定期对它们进行评审。对所有相关需求的清单进行汇总，并定期由 WIS 跨委员会协调组（ICG/WIS）评审，通过 CBS 主席向 EC 提出报告。

ii)　未来可能的 GISC 提出服务意愿

将出版由 ICG-WIS 汇编的 WIS 需求和功能清单，它将作为主动履行职责的基础。WMO 基本系统中现有的中心可能希望申请被指定为构成 WIS 核心基础设施的 GISC。它们提出的服务意愿应包括：

- 一个愿服从 WIS 所需功能的声明，

- 一份关于 WIS 资料服务责任区的建议书，以及

- 会员的 PR 关于定期提供这些服务的正式承诺。

服务意愿应寄送 WMO，并提交 ICG-WIS，它们将通知有关区域协会的主席；ICG-WIS 应针对 WIS 的需求分析提出的服务，以及对所要求的 WIS/GISC 功能的符合情况进行分析，并形成一项建议。

iii)　GISC 能力示范

将邀请候选 GISC 向 CBS 展示它们为公认的用户提供可靠和高质量服务的能力。这涉及到实时收集和分发资料及产品的功能，以及另外提出的非实时服务。示范也应包括全套 WIS 资料和产品，以及相关最新元数据目录的存储功能。还应展示与其他 GISC 的协调功能，以及相互备份服务的计划。此外，必须确保坚持 WIS 标准、相关的资料交换政策，以及调用权限。实施 GISC 和提供 GISC 服务的正式承诺及时间表由运行候选 GISC 的会员 RP 提出。对候选 GISC 的能力展示表示认可后，CBS 将正式提出指定 GISC 的建议。

iv) 指定 GISC

执行理事会审议批准 ICG-WIS 的建议和 CBS 有关指定 GISC 的建议，经 EC 批准后，GISC 将纳入相关的 WMO 计划文件。

2. 指定资料收集或处理中心 (DCPC)

2.1 有相当数量的中心已经部分或全部满足 DCPC 的功能技术要求。这些中心自然是 WIS 框架内 DCPC 的候选者。

在 WWW 计划中建立了许多这样的中心，并已提交以开展 CBS 的正式验收过程（例如世界气象中心、GTS 的区域通信枢纽（RTH）和区域/专业气象中心）。

除了 WWW 业务中心以外，在其他 WMO 计划下还建立了许多其他中心，旨在收集与计划有关的资料，或者提供产品，以及采用实时分发或非实时资料服务的方式将它们提供给 NMHS 和其他用户。上述中心中的大多数和其他根据国家职责建立的中心在通过 WIS 收集资料和产品方面有重要的贡献。其中一些提供了 WIS 倍感兴趣的先进的资料管理和资料分发服务。

考虑到许多计划将参与 WIS 这一事实，可能会出现大量的 DCPC 候选中心。ICG-WIS 不得不确定哪些中心应当进入 WIS，在其中发挥作用。不象对 GISC 数量的要求那样，DCPC 的总数事先没有限定，GISC 须能处理与附属于它的 DCPC 的同步和其他通信问题。

2.2 鉴于上述情况，指定 DCPC 的程序由三个步骤组成，即：

i) 未来可能的 DCPS 的服务意愿

鉴于未来可能的 DCPC 的功能将由各个 WMO 计划下建立的中心执行，所以希望由相关技术委员会来审定潜在的 DCPD 拟承担的服务（按照与上述 1.1 ii 段相类似的程序），并同意其计划的候选 DCPC。

然后应把计划的候选 DCPC 提交 ICG-WIS，ICG-WIS 将针对所要求的 WIS/DCPC 功能和技术规程分析其符合程度，并提出正式的建议。

ii) DCPC 能力展示

与候选 GISC 的情况相同，将邀请候选 DCPC 向 CBS 展示它们提供与 DCPC 功能和职责相符合的 WIS 服务能力。这包括可能的实时分发资料和产品的功能，以及另外提出的非实时服务。示范也应包括提供相关的最新元数据目录。还应展示与相关 GISC 的协调和同步功能。此外，必须确保坚持 WIS 标准、相关的资料交换政策，以及调用权限。在候选 DCPC 的能力展示得到认可后，CBS 将正式提出指定 DCPC 的建议。

iii)　DCPC 的指定

执行理事会审议批准 ICG-WIS 的建议和 CBS 有关指定 DCPC 的建议，在 EC 批准后，DCPC 将纳入相关的 WMO 计划文件。

附录 IV

总摘要第 11.2 和 11.5 段的附录

综合观测系统 OPAG

OPAG-IOS 专家组的工作计划

OPAG-IOS 下设的专家组和报告员/协调员的职责维持不变；ET-EGOS、ET-AWS、ET-SAT 和 ET-SUP 的工作计划如下：

全球观测系统发展专家组（ET-EGOS）2007—2008 年工作计划

(a) 更新 CEOS/WMO 的用户需求和观测系统能力数据库，并使之包括用户评议的 R&D 预期绩效（根据从资料用户和资料制作者收到的信息）；

(b) 扩大用户需求数据库，使之包括“突破”值；

(c) 继续对十个应用领域的需求开展滚动评审，并根据需要扩大到新的领域；

(d) 与应用领域联络员一起工作，对“指南声明”进行更新；

(e) 与报告员和 NWP 专家一起对有关 OSE 的 GOS 发展指南进展情况进行审议；

(f) 2008 年初组织并举办下一次 NWP 影响研究研讨会；

(g) 发起一些行动，监督和确保 GOS 发展实施计划（EGOS-IP）的进展，并与 GOS 区域方面报告员/协调员对这一活动进行协调；

(h) 贯彻执行由 CBS 批准的关于 GOS 发展的建议，特别注意发展中国家的执行情况；编制这些活动的摘要；

(i) 维护并改进 ET-EGOS 网页；

(j) ET-EGOS 与 IPY 的互动：采取行动，以保证 IPY 的观测结果尽可能得到近实时的分发；对由 IPY 观测 SC 完成的观测差距分析的结果进行审议；

(k) 支持 ICT/IOS 主席编制有关 GOS 发展的宣传小册子；

(l) 支持 EC WMO 观测系专题组的活动；

(m) 对有关 GCOS 基准高空网络的建议进行评审；

(n) 改进 GOS 运行统计与 EGOS-IP 间的互动；

(o) 与其他 IOS ET 一道，编写 GOS 的更新版本。

卫星专家组（ET-SAT）2007—2008 年工作计划

(a) 对当前业务与 R&D 环境卫星的能力和计划进行评审，为有关的 OPAG IOS、OPAG ISS 专家组和 ICT 会议提供支持，以协助 WMO 协调的观测系统的整合；

(b) 评审 CM 为这一相关时期提出的建议，并为 OPAG IOS 和 ICT 的工作计划提供支持；

(c) 评审 SOG 和 GOS 发展计划，并为 ET-EGOS 的旨在改进系统能力，特别是发展中国家的系统能力提供支持；

(d) 对扩大 GOS 基准空基部分所产生的影响进行评审，这种扩大是指把对气候监测所需要的更多变量的持续观测纳入进来，以保持 ET-SUP 和 ET-EGOS 相一致，并视情向 CBS 报告；

(e) 为其他由 WMO 资助的、有关卫星系统的能力及其需求的专家组和会议（如 JCOMM、GCOS、WCRP 和 GAW）提供支持；

(f) 评审 GOS 空基和地基子系统的发展实施计划的进展情况，视情况着手开展一些行动，并与 ET-EGOS 一起对这项活动进行协调。

卫星系统应用专家组（ET-SUP）2007—2008 年工作计划

(a) 根据对改进卫星系统应用的战略所作的滚动评审，分析 2007 年两年一次的调查问卷和其他相关信息，用以编写概述“改进卫星系统应用实施计划”的现状的新的 TD；

(b) 与 IGDDS 实施小组互动，检查资料需求，包括跨区域的交换，以及仪器、标准、内容和及时性等是否有助于 WMO 会员充分地利用 ADM 和跨区域资料分发系统；

(c) 与 ET-SAT 一起，评审当前和未来的 R&D 卫星资料与产品，包括它们的有效性和应用情况，以供 WMO 会员更好地使用；

(d) 阐述 WMO 会员在相关领域对 CGMS/WMO 卫星资料应用虚拟实验室（VL）的要求；

(e) 与 WSP 秘书处一起，进一步阐明 WMO 会员在卫星资料和产品的获取与应用、相关的能力建设，以及更好满足这些需求的方式等方面的信息需求；

(f) 进一步完善有关卫星产品的区域/专业中心的理念；

(g) 同 ET-SAT 和 ET-EGOS 一起工作，进一步扩大 GOS 基准的空基部分，使之把对气候监测所需要的更多变量的持续观测纳入进来；

(h) 进一步发展“R&D 向业务过渡”的概念，并更详尽地确定 WMO 可能发挥的作用；

(i) 编写对会员有帮助的文件，对上述活动的成果进行总结。

自动气象站专家组（ET-AWS）2007—2008 年工作计划

(a) 与 CIMO 和其他相关技术委员会协作，更新 AWS 功能技术规范；

(b) 针对适用于各类 AWS（坚固、低功耗、可持续进行通信）的平台制定需求和实施计划，特别是那些偏远地点的 AWS；

(c) 提出对 AWS 使用的传感器的要求和后续实施计划，以便直接为空基观测的标定和地面真实情况提供帮助；

(d) 提出对新的传感器或集成传感器的要求，以解决从人工观测向 AWS 过渡后 AWS 不足的问题；

(e) 与 CIMO 合作，解决点测量与区域测量的集成问题；

(f) 编写指南和程序，为从人工观测站向自动地面观测站过渡提供帮助；

(g) 与其他技术委员会协作，编写有关从新传感器产生的、或对传感器成功集成后产生的新类型资料的实施指南；

(h) 制定提议的四类 AWS 元数据目录；

(i) 编写 AWS 选址类别指南；

(j) 与其他技术委员会合作，最终敲定由 AWS 报告的标准和可选变量清单；

(k) 审查与 AWS 测量有关的 BUFR 描述符，避免与《国际气象词汇》(WMO-No. 182) 的不一致性并保证对该词汇的溯源性；

(l) 与其他 IOS ET 一起更新 GOS 的修订版。

信息系统和服务 OPAG

信息系统和服务 OPAG 增加的任务如下：

信息系统和服务实施协调组（ICT-ISS）

考虑最有效的机制来深入、全面的修改和重组 GTS 手册，以更好地适应目前的技术和规范，并在会员设计和实施相关信息系统中向会员提供帮助

帮助管理组建立一个专家组，以评估用于 NMHS 之间实时业务国际交换和 NMHS 向外部用户传输信息的不同资料表示系统(如 BUFR，CREX，XML，NetCDF，HDF)的利弊

与 ICG-WIS 和 CBS 管理组合作，研究最有效的机制并为开展编写有关的 WIS 规章文件（如 WIS 手册）制订切合实际的计划安排，包括组织及推荐的规范和程序，实施指导材料，阐明国家中心的贡献、参与程度以及收益的 WIS 指南以方便它们参与 WIS 的开发和服务

向表驱动码格式过渡协调组（CT-MTDCF）

准备一封由秘书处发给 WMO 会员的信，它带 2 个附件：应当考虑和可能开展的主要行动或任务的大纲；过渡指南文件

协调建立一个网站，能够提供建检验服务以促进过渡数据流的业务实施和业务前的测试。

元数据实施跨计划专家组（IPET-MI）

牵头寻找能允许用户创建元数据文件的工具，优先考虑能够自动化“收获”常规资料的工具，设立一名编辑来人工创建元数据并编写一份“最佳规范”指南

把 ISO 191xx 标准发给 OPAG-ISS 的其他小组，并准备在 WMO 核心元数据标准 2.0 版中采用这些特点

WMO 资料管理指南报告员

在秘书处的帮助下协调 WWW 资料管理指南的版本

WIS-GTS 通信技术和结构专家组（ET-CTS）

进一步改进 WIS-GTS 资料-通信结构，并考虑如何改进高优先级资料和产品的全球交换，以支持 WIS-GTS 框架内虚拟的全灾害网络。

跟踪 IPv6 的发展。

继续开发/更新关于以最小的业务和安全风险使用因特网的指南材料，以及关于发展中国家的 NMHS 使用足够的 ICT 指南材料。

继续跟踪 VPN 的发展动向，对指导文件作相应的更新和改进

研究引入 MPLS 的全面影响，根据任意连接的新能力并针对 WIS 对报文和文档在 GTS 上的交换和发送机制进行研究，其目的在于改进高优先级资料和产品的交换从而为 WIS-GTS 框架内的虚拟全灾害网络提供支持。

WIS GISC 和 DCPC 专家组（ET-WISC）

拟订 GISC/DCPC/NC 界面的技术规范，其中包括 WIS 组件的统一用户界面

无线电频率协调指导组（SG-RFC）

积极开展活动，重点是 WCR-07 的筹备活动，其中包括计划于 2007 年 2 月召开的 ITU-R 大会筹备会（CPM）

GTS-WIS 业务和实施专家组（ET-OI）及 WWW 监测报告员

进一步巩固和维护<数据标识符>列表，内容应与《电码手册》通用表 C-13 中规定的数据分类和次分类一致

编写可在准业务阶段使用的 IWM 实施指南；评估在准业务阶段所获得的成果和经验，并对该指南进行相应的修订

修订 WWW 综合监测（IWM）程序，以便在 IWM 准业务阶段开始监测各个 WWW 中心 BUFR/CREX 报告的来报率

资料加工和预报系统 OPAG

OPAG-DPFS 的未来工作结构及其专家组、协调组、报告员在 2007－2008 期间的职责如下：

1. 资料加工和预报系统实施协调组

(a) 确定新出现的需求（区协和其他机构所需要的投入）；

(b) 确定 GDPFS 中心为满足新出现的需求做出最佳贡献的途径；

(c) 参加 THORPEX 规划组以便为业务系统的规范实施提出条件和要求；

(d) 通过研讨会和其它传递途径确定培训需求；

(e) 协调 CBS 与 GDPFS 有关的决定的实施；

(f) 对专家组和报告员进行评估，并就未来工作向 CBS 提出建议。

2. 预报检验协调组

(a) 与有关专家组商议，审查检验预报系统性能的程序，以确保这些程序足以满足 CBS 的要求；

(b) 确保检验系统适合新的预报类型，如概率预报，甚高分辨率的 NWP 产品和临近预报；

(c) 为灾害性天气预报和警报开发合适的检验程序；

(d) 审查牵头中心的活动并酌情提供指导；

(e) 视情与 WWRP/WGNE 保持联络；

(f) 就如何实施检验系统提供指导；

3. 集合预报系统专家组

(a) 在中短期 EPS 产品的概率预报方面对 EPS 提出建议，重点是与 EPS 系统所有方面相关的应用，这些系统每天预报天气；

(b) 对 EPS 及其在灾害性天气预报中应用的进展情况进行检查，包括多中心集合预报的进展和基于 EPS 的区域模式的进展，并制定出使这些进展获得最好业务应用的方法；

(c) 在考虑 WMO 所有相关计划的需求和潜在技能的基础上，审查应分发的领域和产品清单；

(d) 对 EPS 产品提出标准（如 EPS－grams，气旋轨迹和袭击概率的介绍，概率的计算，校正方法等）以确保不同中心提供给各 WMO 会员的 EPS 产品的可比性；

(e) 编制供预报员使用的教育和培训资料，包括 EPS 概念和战略的理论基础，以及 EPS 产品的性质、解释和应用，从而为《GDPFS 指南》做出贡献；

(f) 与检验协调组协商，审查 EPS 产品的检验系统，并就检验的说明提供预报指导；

(g) 通过报告检验措施和确定体现集合预报系统能力的最佳方法，对 EPS 牵头检验中心的未来发展给予支持。通过牵头中心的网站向 NMHS 提供相关软件；

(h) 就《GDPFS 手册》（WMO-No.485）中的以下几个方面提出更新建议：

1．用于国际交换和分发的输出产品清单，

2．EPS 的后加工和应用以及如何将它们与预报系统合成，

3．EPS 的检验系统；

(i) 制定并测试 EPS 资料的交换流程，包括大中心交换其集合预报的需求；

(j) 参加 THORPEX 工作组；

1．确保新的 GIFS（全球交互式预报系统）适合业务实施和应用，

2．对 EPS 用于目标观测的进展进行回顾。

4. 数值预报（NWP）基础设施报告员

(a) 与相关专家组进行协商并与 GDPFS 区域报告员协作，审查在 GTS（WIS）上交换的最小 NWP 产品清单；

(b) 提供存取或分发产品的要求以帮助 OPAG/ISS 确定满足这些要求的适当的技术方法；

(c) 审查制定向 NMC 的业务 NWP 有限区域模式提供初始和边界条件的标准和指南的必要性；

5. 甚短期预报专家组

(a) 按照经验和研究进展，对 NWP 模式和描述 0 至 12 小时天气参数的临近预报的应用提供指导，这些参数包括概率描述；

(b) 与预报检验协调组商量,

1.为检验甚高发辩率 NWP 确定适当的技术；

2.为 0 至 12 小时预报产品的业务检验提供指导；

(c) 视情对《GDPFS 手册》（WMO-No.485）的更新提出建议；

6. 延长期和长期预报专家组

(a) 根据对 LRF 产品及其改进的明确要求，对全球制作中心（GPC）、区域气候中心（RCC）和 NMHS 的投入进行评议，并制定有关建立和实施用于制作、存取、分发和交换 LRF，包括对多模式集合预报的适当业务基础设施的建议；

(b) 制定 GPC 之间交换 LRF 预报的流程，包括确定产品（多模式集合预报、模式输出、预报技巧等），并明确交换条件；

(c) 编制新的释用指南，以方便使用延长期和长期距平预报，从而为《GDPFS 指南》做出贡献；

(d) 报告制作、存取、分发和交换的情况，并提出建议，供 CAS、CCl、CBS 和其他相关机构今后审议并通过；

(e) 对供 NMHS 和 RCC 使用的延长期和长期预报检验评分和 GPC 的相关信息的提供进行协调；

(f) 鼓励和监督 NMHS 和 RCC 对 GPC 按照方案提供的检验信息的有效性提出反馈意见；

(g) 帮助进一步提高牵头中心的作用以及互联网站的进一步开发，包括开发和提供相关软件与数据集；

(h) 与预报检验协调组协商，根据在检验活动中取得的经验和进展，提出在检验统计计算时需要遵守的业务规范的更新建议并提出对长期预报产品有用的信息；

(i) 与 CAS（CLIVAR/季到年际预报工作组）和 CCl 磋商，提出改进 SVSLRF 的建议，包括诸如多模式集合预报等开发领域。

7. 核紧急响应活动协调组

(a) 测试并改进所有 RSMC、IAEA、奥芬巴赫 RTH 和 NMHS 在 ERA 方面的集体能力，以便根据通过的标准和程序完成全球和区域运作安排中规定的业务要求；

(b) 与 IAEA 和其他相关组织合作，实施并进一步探索 NMHS 与 IAEA 之间专用产品分发/存取的改进方法；

(c) 核查各个 RSMC 为核紧急事件制作增强产品的能力；

(d) 检查辐射监测资料的业务可提供性；

(e) 开发大气输送模拟回追产品的概念；

(f) 继续实施与 CTBTO 的业务安排。

8. 非核 ERA 大气输送模拟专家组

(a) 确定 NMHS 对大气输送模拟的需求；

(b) 检查 RSMS 和其他中心的大气输送模拟能力，以便在非核紧急事故，如火山喷发、沙尘暴、野外大火、化学和生物事故及其他危险事故中提供支持；

(c) 确定涉及非 ERA 的国际组织（如 WHO、UNEP、UN-OCHA、其他组织）的潜在作用；

(d) 检查现状并制定行动计划。

9. NWP 在灾害性天气预报中应用报告员

(a) 全面检查 NWP 在灾害性和强影响天气预报中的应用情况；

(b) 报告灾害性和强影响天气预报的新发展和进步；

(c) 就示范项目建议提出意见。

公共天气服务 OPAG

以下列出了公共天气服务 OPAG 尚未完成的任务（从 CBS-13 批准的 2005-2008 年期间的任务引出）。此外，ICT 可以在 2007 年的会议上酌情作进一步补充。

服务与产品改进专家组

(a) 在集合预报系统（EPS）的推动下概率预报产品和服务的适用性研讨会（包括应急管理部门的预报员和代表）。

(b) 编写《生物气象和空气质量预报指南》的增补件。

(c) 扩大六区协检验技术试点工作并编写有关该主题的技术文件。

公共天气服务支持防灾减灾专家组

(a) 编写关于 PWS 在防灾备灾中如何为降低脆弱性做出贡献的个案研究和成功事例，尤其是通过有效的警报系统。

(b) 随着欧洲的 EMMA 项目转入业务实施阶段，继续推动 SWIC 和 EMMA（气象警报）之间的联系。

PWS 沟通事宜专家组

(a) 制定确定合适的教员和学员的标准，供 PWS 媒体宣传培训活动使用。

(b) 编辑和出版在向媒体介绍所有天气和气候相关信息方面的“最佳规范”范例。

(c) 完成 WWIS 和 SWIC 网站用户指导手册的出版和分发。

(d) 继续评估 WWIS 和 SWIC 的效果。

(e) 编写和出版在介绍概率天气预报时如何传递不确定性和置信概念的指南。

实施协调组

(a) 根据已出版的一套 PWS 指南以及已作的调查分析结果，与有关专家组协调启动项目设计工作，从而推动许多 PWS 计划进入实施阶段。

(b) 继续改进对 PWS 的需要和要求的指南，以此作为对 THORPEX 设计和实施的贡献。

(c) 基于从发给各组长的问卷调查所收集到的信息，在需要与其他 CBS OPAG 进一步协作的方面继续开展进一步的行动。

质量管理框架报告员

1. 视情对 CBS 阐述的由 OPAG 负责修订的质量指南进行审查，以保证其中使用的术语和“ISO 9000：2005 标准”中与质量有关的术语的定义相一致。

2. 代表本委员会积极参加 ICTT-QMF 的工作。

3. 与 OPAG 协调，每年更新会员使用的有效的 CBS 指南文件清单。

4. 向委员会报告，并向委员会建议应开展哪些活动来支持作为委员会活动整体部分的 WMO QMF。

CBS 男女平等问题联络员的职责

(a) 按要求将委员会工作中有关妇女和男人作用的详细资料进行收集并加于分析；

(b) 与 WMO 男女平等问题联络员联系，并与其共同收集和分发包括委员会相关领域里妇女作用方面的研究和政策的信息；

(c) 与其他技术委员会中的男女平等问题联络员合作；

(d) 探索、用文件证明并提出相关建议，以满足每个地区内与委员会有关的的能力建设需求；

(e) 按照 CBS 管理组的要求提交报告。

附　件

与会人员名单

1. Officers of the session

President	A.I. Gusev (Russian Federation)
Vice-President	G.-R. Hoffmann (Germany)

2. Representatives of WMO Members

Algeria

S. Fekhar	Delegate

Australia

S. Barrell	Principal Delegate
P. Gigliotti	Delegate
T. Hart	Delegate

Azerbaijan

S. Shiraliyev	Principal Delegate
S. Khalilov	Delegate

Bahrain

Y.A. Khalaf	Delegate

Belarus

A. Sushchenia	Delegate

Belgium

D. Gellens	Delegate

Brazil

J. M. de Rezende	Principal Delegate
W. Almeida	Delegate

British Caribbean Territories

F. Sambula	Principal Delegate

Bulgaria

M. Grueva-Altanova	Principal Delegate

Canada

A. Simard (Ms)	Principal Delegate
M. Jean	Alternate
T. Nichols	Delegate
S. Nadon	Delegate
J-F. Gagnon	Delegate

China

Zhang Wenjian	Principal Delegate
Yang Jun	Delegate
Zhao Licheng	Delegate
Shi Peiliang	Delegate
Hu Xin	Delegate

Croatia

I. Čačić	Principal Delegate
K. Pandžić	Delegate

Czech Republic

E. Červená (Ms)	Principal Delegate

Denmark

N. Olsen	Delegate

Egypt

M.H. Hassan	Delegate

Estonia

J. Saar	Principal Delegate

Finland

P. Plathan	Principal Delegate

France

B. Strauss	Principal Delegate
M. Dell'Acqua	Delegate

Germany

G-R. Hoffmann	Principal Delegate
G. Steinhorst	Delegate

Hong Kong, China

Wai Man MA	Principal Delegate

Hungary

M. Buránszkiné Sallai (Ms)	Delegate

Iceland

G. Hafsteinsson	Principal Delegate

India

A.K. Bhatnagar	Delegate

Indonesia

A. Sumartono	Principal Delegate
A. Badrul Jamal	Delegate

Iran, Islamic Republic of

A.M. Noorian	Principal Delegate
M. Jabbari (Ms)	Delegate

Ireland

P. Halton	Principal Delegate
G. Fleming	Delegate

Italy

D. Villa	Principal Delegate
A. Raspanti	Delegate

Japan

H. Ichijo	Principal Delegate
K. Koizumi	Delegate
A. Shimazaki	Delegate

Kenya

J.R. MukabanaPrincipal	Delegate
W. Nyakwada	Delegate

Libyan Arab Jamahiriya

A.R. Wlad ELHAJ	Principal Delegate
H.S. Ganedi	Delegate

Lithuania

V. Augulienė (Ms)	Delegate

Malaysia

Tan Huvi Vein	Delegate

Morocco

A. Mokssit	Delegate

Namibia

E. Akwaake	Principal Alternate
F. Uirab	Delegate

Netherlands

T. van Stijn	Principal Delegate

New Zealand

T. Quayle	Principal Delegate

Norway

R. Skålin	Principal Delegate
K. Bjørheim	Alternate

Oman

A.H. Al-Harthi	Principal Delegate
S.A. Al-Harthi	Delegate

Poland

M. Ostojski	Principal Delegate
J. Zielinski	Alternate
B. Ozga-Zielinski	Delegate

Republic of Korea

B.J. Koo	Principal Delegate
K.J. Park	Alternate
H.S. Lee	Delegate
W.T. Yun	Delegate
D.I. Lee	Delegate
H.D. Yoo	Delegate
D.E. Chang	Delegate
B.H. Heo	Delegate

M.L. Ou	Delegate
J.C. Nam	Delegate
S.O. Han	Observer
H.S. Jung	Observer

Russian Federation

V. Dyadyuchenko	Principal Delegate
A. Gusev	Delegate
R. Vilfand	Delegate
A. Minaev	Delegate
A. Gavrilov	Delegate
S. Lubov	Delegate
L. Bezruk	Delegate

Senegal

S. Diallo	Principal Delegate

Serbia

J. Andrejevic (Ms)	Principal Delegate
P. Sunderic	Delegate
D. Jovanovic	Delegate

Slovakia

I. Zahumenský	Delegate

South Africa

J. Mphepya	Principal Delegate
M. Ndabambi	Delegate

Sweden

T. Kvick	Delegate

Switzerland

P. Rauh	Principal Delegate
E. Grüter (Ms)	Delegate

Turkey

C. Oktar	Principal Delegate

United Arab Emirates

Y.N. Al Kalbani	Principal Delegate

J. Dhanhani	Delegate
A. Dhanaani	Delegate
H. Banihmad	Delegate
A. Al Hamairy	Delegate

United Kingdom of Great Britain and Northern Ireland

S. Noyes	Principal Delegate
S. Foreman	Alternate
T. Butcher	Delegate

United Republic of Tanzania

P. Tibaijuka	Principal Delegate

United States of America

J.E. Jones	Principal Delegate
F.R. Branski	Alternate
V.L. Nadolski (Ms)	Delegate
W.C. Bolhofer	Delegate
J.F.W. Purdom	Delegate
S. Mason	Delegate

Uzbekistan

I. Zaytseva (Ms)	Delegate

Venezuela

T.C. Carballo Gutiérrez	Delegate

Zimbabwe

W. Chawaguta	Delegate

3. Representatives of the Regional Working Groups on Planning and Implementation of the WWW

Region I	W. Nyakwada
Region II	A. K. Bhatnagar
Region III	T. Carballo
Region IV	F. Sambula

Region V T. Hart

Region VI J. Dibbern

4. Representatives of International Organizations

Agency for Air Safety in Africa and Madagascar (ASECNA)

J. Mbolidi
M.A. Watt

Association of Hydro-Meteorological Equipment Industry (HMEI)

T. Woong Kim
M. Weis
Y. Hayashi
N. Tamura
A. Tothova

European Centre for Medium-Range Weather Forecasts (ECMWF)

W. Zwieflhofer
H. Boettger

European Organisation for the Exploitation of Meteorological Satellites (EUMETSAT)

M. Rattenborg

EUMETNET

J. Dibbern

Preparatory Commission for the Comprehensive Nuclear-Test-Ban Treaty Organization (CTBTO)

G. Wotawa

International Civil Aviation Organization (ICAO)

O. Turpeinen

5. Other participants

A. Hovsepyan Armenia

L. Poveda Ecuador

K. Hailemariam	Ethiopia
O. Abramenko (Ms)	Kazakhstan
J. Rwakishaija	Uganda
V. Lipinsky	Ukraine